FUEL

CONTENTS

GASOLINE DIRECT INJECTION (GDI) <4G9> 13A
MULTIPOINT FUEL INJECTION (MPI) <4G1> 13B
MULTIPOINT FUEL INJECTION (MPI) <4G9> 13C
FUEL SUPPLY 13D

GASOLINE DIRECT INJECTION (GDI) <4G9>

CONTENTS

GENERAL INFORMATION 3

SERVICE SPECIFICATIONS 7

SEALANT 7

SPECIAL TOOLS 8

TROUBLESHOOTING 10

ON-VEHICLE SERVICE 91

- Throttle Body (Throttle Valve Area) Cleaning ... 91
- Throttle Position Sensor Adjustment 91
- Accelerator Pedal Position Sensor Adjustment 93
- Fuel Pressure Test 94
- Fuel Leak Check 98
- Fuel Pump Connector Disconnection (How to Reduce Fuel Pressure) 98
- Fuel Pump Operation Check 99
- Component Location 100
- Engine Control Relay, Fuel Pump Relay, Injector Driver Relay and Throttle Valve Control Servo Relay Continuity Check 101
- Intake Air Temperature Sensor Check 101
- Engine Coolant Temperature Sensor Check ... 101
- Throttle Position Sensor Check 102
- Accelerator Pedal Position Sensor (1st channel) Check 103
- Accelerator Pedal Position Sensor (2nd channel) Check 103
- Accelerator Pedal Position Switch Check 104
- Oxygen Sensor Check 104
- Injector Check 105
- Throttle Valve Control Servo Check 106
- Purge Control Solenoid Valve Check 106
- EGR Valve Check 106

FUEL PUMP (HIGH PRESSURE) AND FUEL PRESSURE REGULATOR (HIGH PRESSURE) 107

INJECTOR 110

THROTTLE BODY 113

INJECTOR DRIVER 115

THROTTLE VALVE CONTROLLER 116

GENERAL INFORMATION

The Gasoline Direct Injection System consists of sensors which detect the engine conditions, the engine-ECU which controls the system based on signals from these sensors, and actuators which operate under the control of the engine-ECU. The engine-ECU carries out activities such as fuel injection control, idle speed control and ignition timing control. In addition, the engine-ECU is equipped with several diagnosis modes which simplify troubleshooting when a problem develops.

FUEL INJECTION CONTROL

The injector drive times and injector timing are controlled so that the optimum air/fuel mixture is supplied to the engine to correspond to the continually-changing engine operation conditions.

A single injector for each cylinder is mounted at the cylinder head. The fuel is sent under pressure from the fuel tank to the fuel pressure regulator (low pressure) by the fuel pump (low pressure). The pressure is regulated by the fuel pressure regulator (low pressure) and the fuel regulated is then sent to the fuel pump (high pressure). The fuel under increased pressure generated by the fuel pump (high pressure) is then regulated by the fuel pressure regulator (high pressure) and is then distributed to each of the injectors via the delivery pipes.

Fuel injection is normally carried out once for each cylinder for every two rotations of the crankshaft. The firing order is 1-3-4-2. This is called sequential fuel injection.

When the engine is cold or under a severe load, the "open-loop" control keeps the air/fuel ratio at a richer than usual level to maintain driveability. When the engine is under low or medium loads, the air/fuel ratio becomes leaner to reduce fuel consumption. When the engine is running at medium or high loads after having warmed up, the "closed-loop" control uses the signal from the oxygen sensor to keep the air/fuel ratio at the optimum theoretical level.

THROTTLE VALVE OPENING ANGLE CONTROL

This system controls throttle valve opening angle electronically. The engine-ECU determines how deeply the accelerator pedal is depressed by means of the accelerator position sensor (APS). Then the engine-ECU sends a target value of the throttle valve opening angle to the throttle valve controller. The throttle valve control servo operates the throttle valve so that it reaches the target opening angle.

IDLE SPEED CONTROL

This system maintains engine idle speed at a predetermined condition by controlling the air flow that passes through the throttle valve according to engine idling condition and engine loads at idling.

The engine-ECU operates the throttle valve control servo so that engine speed is maintained within a map value. The map value is predetermined according to engine coolant temperature and air-conditioning load. In addition, if the A/C switch is turned on or off during engine idling, the engine-ECU compensates the engine speed by operating the throttle valve control servo as necessary.

IGNITION TIMING CONTROL

The power transistor located in the ignition primary circuit turns ON and OFF to control the primary current flow to the ignition coil. This controls the ignition timing in order to provide the optimum ignition timing with respect to the engine operating conditions. The ignition timing is determined by the engine-ECU from the engine speed, intake air volume, engine coolant temperature, atmospheric pressure and injection timing (intake stroke or compression stroke).

SELF-DIAGNOSIS FUNCTION

- When an abnormality is detected in one of the sensors or actuators related to emission control, the engine warning lamp (check engine lamp) illuminates as a warning to the driver.
- When an abnormality is detected in one of the sensors or actuators, a diagnosis code corresponding to the abnormality is output.
- The RAM data inside the engine-ECU that is related to the sensors and actuators can be read by means of the MUT-II. In addition, the actuators can be force-driven under certain circumstances.

OTHER CONTROL FUNCTIONS

1. Fuel Pump Control
   Turns the fuel pump relay ON so that current is supplied to the fuel pump while the engine is cranking or running.
2. A/C Relay Control
   Turns the compressor clutch of the A/C ON and OFF.
3. Fan Motor Control
   The revolutions of the radiator fan and condenser fan are controlled in response to the engine coolant temperature and vehicle speed.
4. Purge Control Solenoid Valve Control
   Refer to GROUP 17.
5. EGR Control Servo Control
   Refer to GROUP 17.

GENERAL SPECIFICATIONS

Items		Specifications
Throttle body	Throttle bore mm	60
	Throttle position sensor	Variable resistor type
	Throttle valve control servo	Torque motor type
Engine-ECU	Identification model No.	E2T71576
Sensors	Air flow sensor	Karman vortex type
	Barometric pressure sensor	Semiconductor type
	Intake air temperature sensor	Thermistor type
	Engine coolant temperature sensor	Thermistor type
	Oxygen sensor	Zirconia type
	Accelerator pedal position sensor	Variable resistor type
	Accelerator pedal position switch	Rotary contact type, within accelerator pedal position sensor
	Vehicle speed sensor	Magnetic resistive element type
	Inhibitor switch	Contact switch type
	Camshaft position sensor	Magnetic resistive element type
	Crank angle sensor	Hall element type
	Detonation sensor	Piezoelectric type
	Fuel pressure sensor	Metallic membrane type
	Power steering fluid pressure switch	Contact switch type

Items		Specifications
Actuators	Engine control relay type	Contact switch type
	Fuel pump relay type	Contact switch type
	Injector driver control relay	Contact switch type
	Injector type and number	Electromagnetic type, 4
	Injector identification mark	DIM 1000G
	Throttle valve control servo relay	Contact switch type
	Throttle valve control servo	Torque motor type
	EGR control servo	Stepper motor type
	Purge control solenoid valve	Duty cycle type solenoid valve
Fuel pressure regulator (low pressure)	Regulator pressure kPa	324
Fuel pressure regulator (high pressure)	Regulator pressure MPa	5

GASOLINE DIRECT INJECTION SYSTEM DIAGRAM

*1 Oxygen sensor *2 Air flow sensor *3 Intake air temperature senor *4 Throttle position sensor (2nd channel) *5 Camshaft position sensor *6 Crank angle sensor *7 Barometric pressure sensor *8 Engine coolant temperature sensor *9 Detonation sensor *10 Fuel pressure sensor	• Power supply • Ignition switch – IG • Ignition switch – ST • Accelerator pedal position sensor (1st channel) • Accelerator pedal position switch • Vehicle speed sensor • A/C switch • A/C thermo sensor • Inhibitor switch • Power steering fluid pressure switch • Alternator FR terminal • Stop lamp switch • Small lamp switch • Injector wire open circuit check signal • Throttle valve controller • A/T-ECU	⇨ Engine-ECU ⇨	◆1 Injector driver (Injector) ◆2 EGR valve (Stepper motor) ◆3 Purge control solenoid valve	• Engine control relay • Fuel pump relay • Injector driver relay • Throttle valve control servo relay • A/C relay • Ignition coil • Fan controller • GDI ECO indicator lamp • Engine warning lamp • Diagnosis output • Alternator G terminal • Throttle valve controller • A/T-ECU
*11 Throttle position sensor (1st channel)	• Power supply • Ignition switch – IG • Accelerator pedal position sensor (2nd channel) • Engine-ECU	⇨ Throttle valve controller ⇨	◆4 Throttle valve control servo	• Engine-ECU

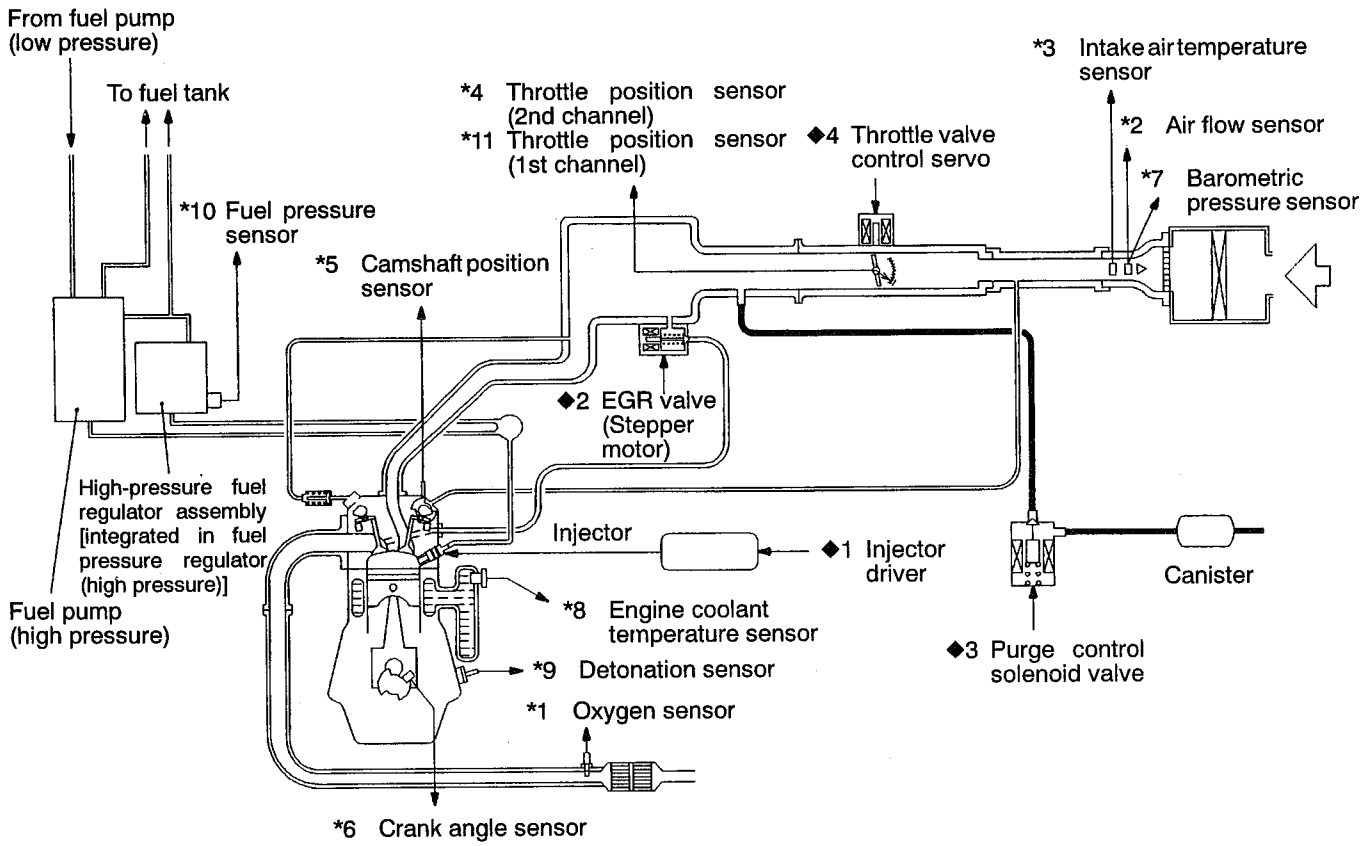

6FU2789

SERVICE SPECIFICATIONS

Item		Standard value
Adjustment voltage of throttle position sensor (1st channel) V		0.4 – 0.6
Adjustment voltage of throttle position sensor (2nd channel) V		4.2 – 4.8
Resistance of throttle position sensor kΩ		3.5 – 6.5
Adjustment voltages (1st channel) and (2nd channel) of accelerator pedal position sensor V		0.935 – 1.135
Resistance (1st channel) and (2nd channel) of accelerator pedal position sensor kΩ		3.5 – 6.5
Intake air temperature sensor resistance kΩ	at 20°C	2.3 – 3.0
	at 80°C	0.30 – 0.42
Engine coolant temperature sensor resistance kΩ	at 20°C	2.1 – 2.7
	at 80°C	0.26 – 0.36
Fuel pressure	High-pressure side MPa	4 – 6.9
	Low-pressure side kPa	Approximately 324
Injector coil resistance Ω		0.9 – 1.1
Oxygen sensor output voltage (at racing) V		0.6 – 1.0
Oxygen sensor heater resistance Ω		11 – 18
Throttle valve control servo resistance Ω		1.35 – 1.65

SEALANT

Item	Specified sealant	Remark
Engine coolant temperature sensor threaded portion	3M Nut Locking Part No. 4171 or equivalent	Drying sealant

SPECIAL TOOLS

Tool	Number	Name	Use
A 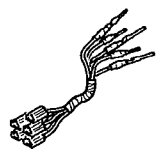 B 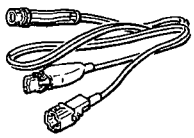 C 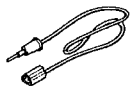 D  C991223	MB991223 A: MB991219 B: MB991220 C: MB991221 D: MB991222	Harness set A: Test harness B: LED harness C: LED harness adapter D: Probe	• Fuel gauge simple inspection A: Connector pin contact pressure inspection B: Power circuit inspection C: Power circuit inspection D: Commercial tester connection
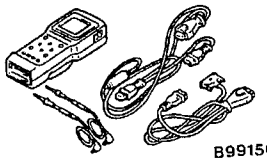 B991502	MB991502	MUT-II sub assembly	• Reading diagnosis code • GDI system inspection
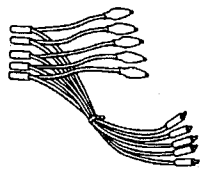	MB991348	Test harness set	• Measurement of voltage during trouble-shooting • Inspection using an analyzer
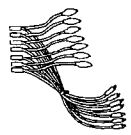 MB991709	MB991709	Test harness	
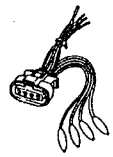	MB991519	Alternator harness connector	Measurement of voltage during troubleshooting
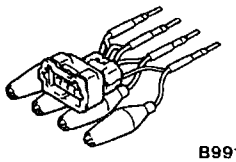 B991536	MB991536	TPS adjustment harness	Adjustment of throttle position sensor
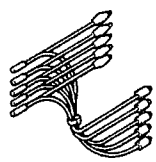 B991658	MB991658	Test harness	• Measurement of voltage during troubleshooting • Inspection using an analyzer • Adjustment of accelerator pedal position sensor

Tool	Number	Name	Use
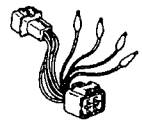	MD998464	Test harness (4-pin, square)	Oxygen sensor inspection
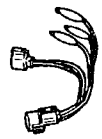	MD998478	Test harness (3-pin, triangle)	• Measurement of voltage during trouble-shooting • Inspection using an analyzer
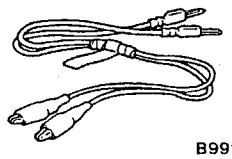 B991529	MB991529	Diagnosis code check harness	Reading diagnosis code
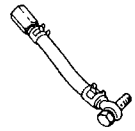	MD998709	Adaptor hose	Measurement of fuel pressure
	MD998742	Hose adaptor	
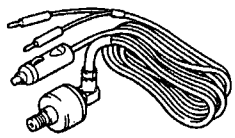 B991637	MB991637	Fuel pressure gauge set	

TROUBLESHOOTING

DIAGNOSIS TROUBLESHOOTING FLOW

Refer to GROUP 00 – How to Use Troubleshooting/Inspection Service Points.

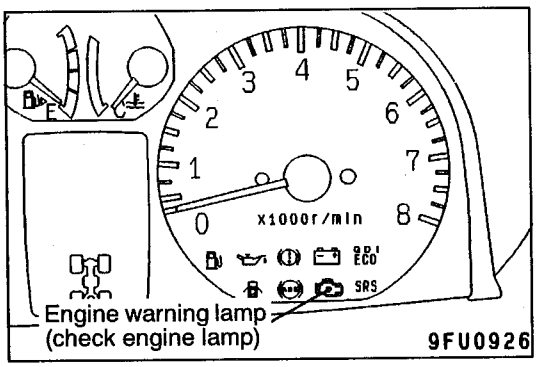

DIAGNOSIS FUNCTION

ENGINE WARNING LAMP (CHECK ENGINE LAMP)

If an abnormality occurs in any of the following items related to the Gasoline Direct Injection (GDI) system, the engine warning lamp will illuminate.
If the lamp remains illuminated or if the lamp illuminates while the engine is running, check the diagnosis code output.

Engine warning lamp inspection items

Air flow sensor
Intake air temperature sensor
Throttle position sensor (1st channel)
Throttle position sensor (2nd channel)
Engine coolant temperature sensor
Crank angle sensor
Camshaft position sensor
Barometric pressure sensor
Detonation sensor
Injector
Abnormal combustion
Abnormal fuel pressure
Brake vacuum sensor
Fuel system malfunction
Accelerator pedal position sensor (1st channel)
Accelerator pedal position sensor (2nd channel)
Electronic-controlled throttle valve system

Throttle valve position feedback
Throttle valve control servo motor (1st motor)
Throttle valve control servo motor (2nd motor)
Communication line system with throttle valve controller
Engine-ECU

NOTE
When the electronic-controlled throttle valve system is stopped, the engine warning lamp flashes.

METHOD OF READING AND ERASING DIAGNOSIS CODES

Refer to GROUP 00 – How to Use Troubleshooting/Inspection Service Points.

INSPECTION USING MUT-II DATA LIST AND ACTUATOR TESTING

1. Carry out inspection by means of the data list and the actuator test function.
   If there is an abnormality, check and repair the chassis harnesses and components.
2. After repairing, re-check using the MUT-II and check that the abnormal input and output have returned to normal as a result of the repairs.
3. Erase the diagnosis code memory.
4. Remove the MUT-II.
5. Start the engine again and carry out a road test to confirm that the problem has disappeared.

FAIL-SAFE FUNCTION REFERENCE TABLE

If the diagnosis system detects any sensor malfunction, the vehicle can be driven safely by using a default control logic instead of the faulty sensors.

Defective part or function	What to do when a sensor is defective
Air flow sensor	(1) Disables lean-mixture combustion. (2) Determines injector basic operating time and basic ignition timing according to map value, which has been predetermined by throttle position sensor and crank angle sensor signals.
Intake air temperature sensor	Controls as the intake air temperature is 25°C.
Throttle position sensor (1st channel)	(1) Disables lean-mixture combustion. (2) Controls throttle valve opening angle by closed loop control by using the throttle position sensor (2nd channel) signal. (3) Disables the throttle valve opening angle control when the throttle position sensor (2nd channel) signal is also defective.
Throttle position sensor (2nd channel)	(1) Disables lean-mixture combustion. (2) Controls throttle valve opening angle by closed loop control by using the throttle position sensor (1st channel) signal. (3) Disables the throttle valve opening angle control when the throttle position sensor (1st channel) signal is also defective.
Engine coolant temperature sensor	Controls as if the engine coolant temperature is 80°C. (Note that this control will continue until the ignition switch is turned off even if the sensor signal return to normal.)
Camshaft position sensor	Controls according to the conditions before a failure is detected.
Vehicle speed sensor	(1) Disables lean-mixture combustion. However, if a predetermined time elapses at an engine speed of 1,500 r/min or more, the lean-mixture combustion will return to normal. (2) Disables lean-mixture combustion during engine idling.
Barometric pressure sensor	Controls as if the barometric pressure is 101 kPa.
Detonation sensor	Holds the ignition timing at that for standard petrol.
Injector	(1) Disables lean-mixture combustion. (2) Shuts down exhaust gas recirculation.
Abnormal combustion	Disables lean-mixture combustion.
Communication line with A/T-ECU	Disables ignition timing retard control (engine and transmission total control) during shift change.
Alternator FR terminal	Disables inhibition control of the alternator output according to electrical load (treats the alternator as if it is conventional one).
Fuel pressure sensor	(1) Controls as if the fuel pressure is 5 MPa (if there is open or short circuit). (2) Turns off the fuel pump relay (if the fuel pressure is excessively high). (3) Shuts off the fuel injection (If an excessively low pressure is detected or the engine speed exceeds 3,000 r/min).

Defective part or function	What to do when a sensor is defective
Accelerator pedal position sensor (1st channel)	(1) Disables lean-mixture combustion. (2) Controls the throttle valve position by using the accelerator pedal position sensor (2nd channel) signal. (3) Disables the electronic-controlled throttle valve system if the accelerator pedal position sensor (2nd channel) signal is also defective.
Accelerator pedal position sensor (2nd channel)	(1) Disables lean-mixture combustion. (2) Controls the throttle valve position by using the accelerator pedal position sensor (1st channel) signal. (3) Disables the electronic-controlled throttle valve system if the accelerator pedal position sensor (1st channel) signal is also defective.
Electronic-controlled throttle valve system	(1) Disables the electronic-controlled throttle valve system. (2) Disables lean-mixture combustion. (3) Disables engine speed feedback control.
Throttle valve position feedback	(1) Disables the electronic-controlled throttle valve system. (2) Disables lean-mixture combustion. (3) Disables engine speed feedback control. However, if the throttle valve opening is great, controls as follows: (1) Carries out lean-mixture combustion continuously. (2) Shuts off fuel supply for 2 cylinders continuously. (3) Shuts off fuel supply when engine speed exceeds 3,000 r/min.
Throttle valve control servo motor (1st motor) malfunction	Disables lean-mixture combustion.
Throttle valve control servo motor (2nd motor) malfunction	(1) Disables the electronic-controlled throttle valve system. (2) Disables lean-mixture combustion. (3) Disables engine speed feedback control.
Communication line with the throttle valve controller	(1) Error in communication from the throttle valve controller to engine-ECU • Disables lean-mixture combustion. • Shuts off fuel supply when engine speed exceeds 3,000 r/min. (2) Error in communication from the engine-ECU to throttle valve controller • Disables lean-mixture combustion. • Shuts off fuel supply when engine speed exceeds 3,000 r/min. • The throttle valve controller controls the throttle valve opening angle by using the accelerator pedal position sensor (2nd channel) signal.

NOTE
When the electronic-controlled throttle valve system is stopped, the engine warning lamp flashes.

INSPECTION CHART FOR DIAGNOSIS CODES

Code No.	Diagnosis item	Reference page
12	Air flow sensor system	13A-15
13	Intake air temperature sensor system	13A-16
14	Throttle position sensor (2nd channel) system	13A-17
21	Engine coolant temperature sensor system	13A-18
22	Crank angle sensor system	13A-19
23	Camshaft position sensor system	13A-20
24	Vehicle speed sensor system	13A-21
25	Barometric pressure sensor system	13A-22
31	Detonation sensor system	13A-23
41	Injector system	13A-24
44	Abnormal combustion	13A-26
56	Abnormal fuel pressure system	13A-27
61	Communication line with A/T-ECU system	13A-29
64	Alternator FR terminal system	13A-29
66	Brake vacuum sensor system	13A-30
77	Accelerator pedal position sensor (2nd channel) system	13A-31
78	Accelerator pedal position sensor (1st channel) system	13A-32
79	Throttle position sensor (1st channel) system	13A-33
89	Abnormality in fuel pressure system	13A-34
91	Electronic-controlled throttle valve system	13A-34
92	Throttle valve position feedback system	13A-35
94	Communication line system with throttle valve controller	13A-35
95	Malfunction in throttle valve control servo motor (1st motor) system	13A-36
99	Malfunction in throttle valve control servo motor (2nd motor) system	13A-36

NOTE
Code No. 56 may be also output when air is sucked in high-pressure fuel line due to no fuel supply.

INSPECTION PROCEDURE FOR DIAGNOSIS CODES

Code No.12 Air flow sensor system	Probable cause
Range of check • Engine speed is 500 r/min or more. Set conditions • Sensor output frequency is 3.3 Hz or less for 4 seconds.	• Malfunction of the air flow sensor • Open circuit or short-circuited harness wire of air flow sensor circuit • Malfunction of the engine-ECU

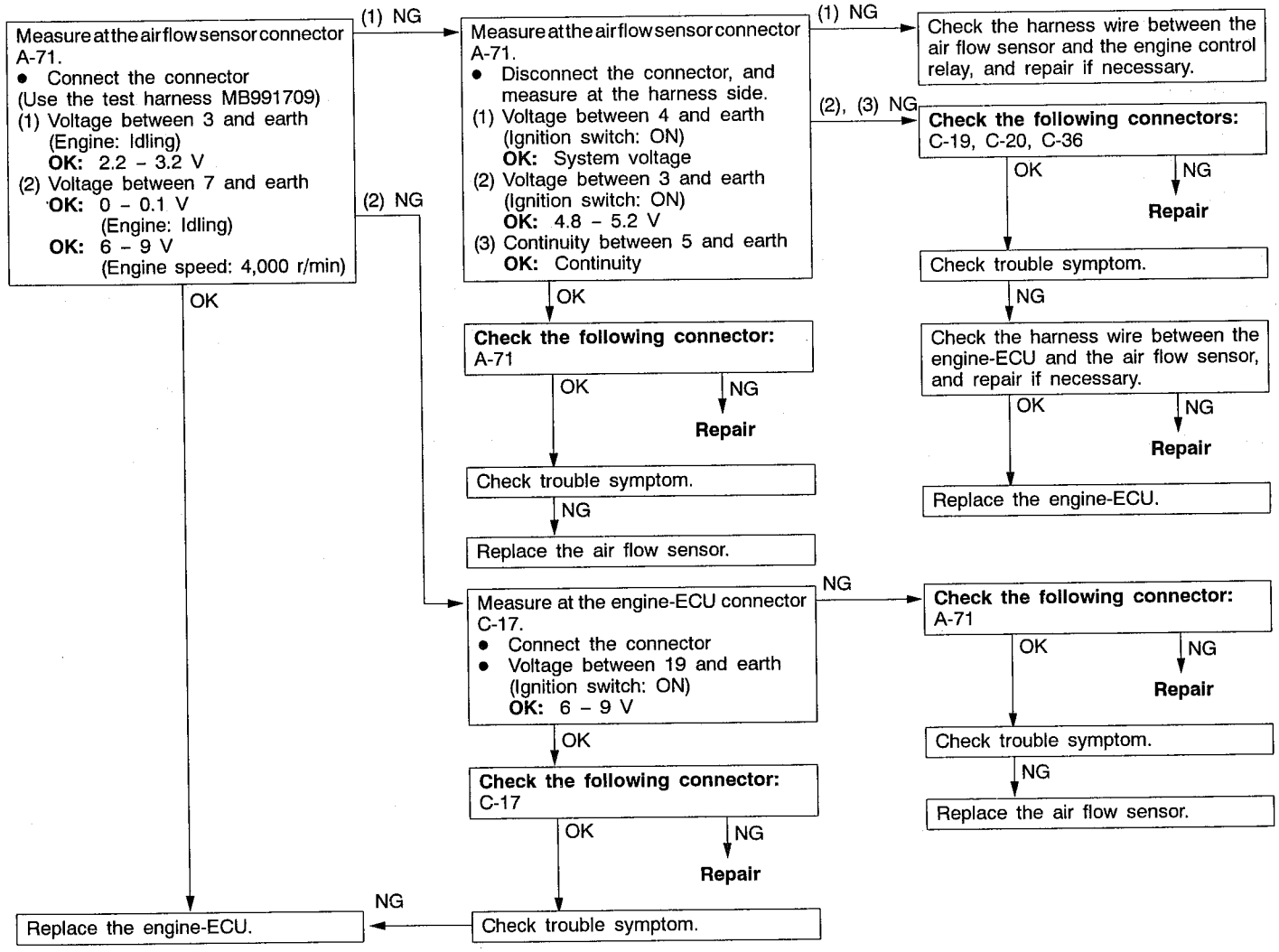

Code No.13 Intake air temperature sensor system	Probable cause
Range of check • After 60 seconds have passed since the engine have started Set conditions • Sensor resistance is 0.14 kΩ or less for 4 seconds. or • Sensor resistance is 50 kΩ or more for 4 seconds.	• Malfunction of the intake air temperature sensor • Open circuit or short-circuited harness wire of the intake air temperature sensor circuit • Malfunction of the engine-ECU

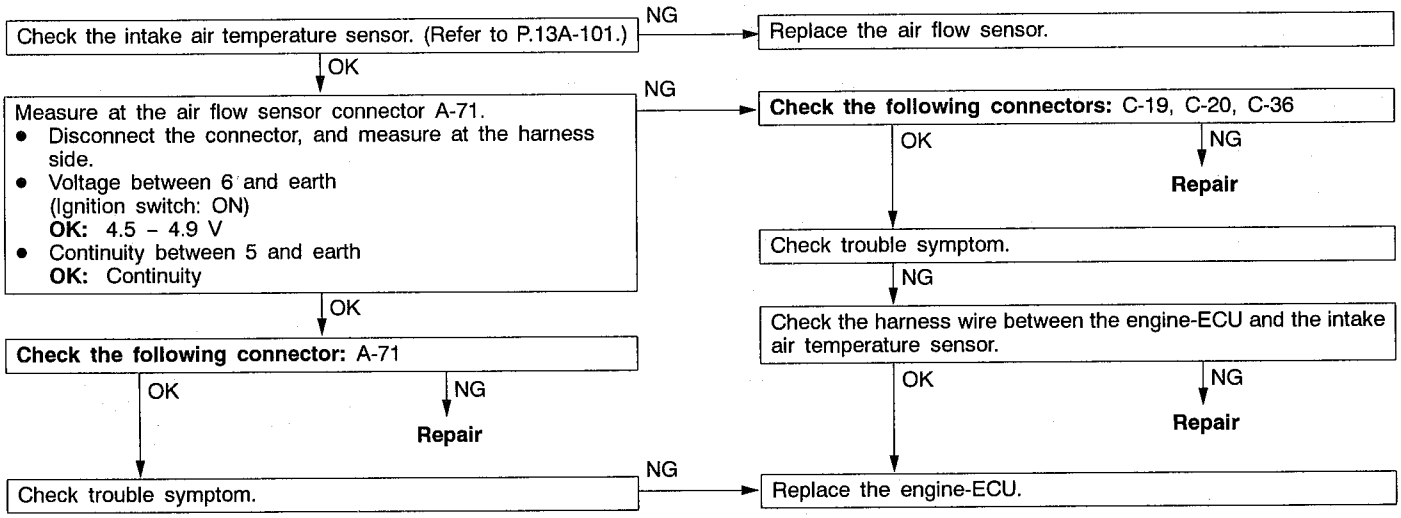

Code No.14 Throttle position sensor system (2nd channel)	Probable cause
The throttle valve controller determines whether a failure is present or not, and sends a signal indicating its result to the engine-ECU. Range of check • Ignition switch: ON • Throttle position sensor (1st channel) is normal Set conditions • The throttle position sensor (1st channel) output voltage is 1.24 V or more, and the (2nd channel) output voltage is 4.6 V or more for one second. or • The throttle position sensor (1st channel) output voltage is 3.53 V or less, and the (2nd channel) output voltage is 0.2 V or less for one second. or • Throttle position sensor (1st and 2nd channels) output voltages are outside 4 to 6 V.	• Malfunction of throttle position sensor (2nd channel) • Open circuit or short-circuited harness wire in throttle position sensor (2nd channel) or poor connector contact • Faulty throttle valve controller • Malfunction of the engine-ECU

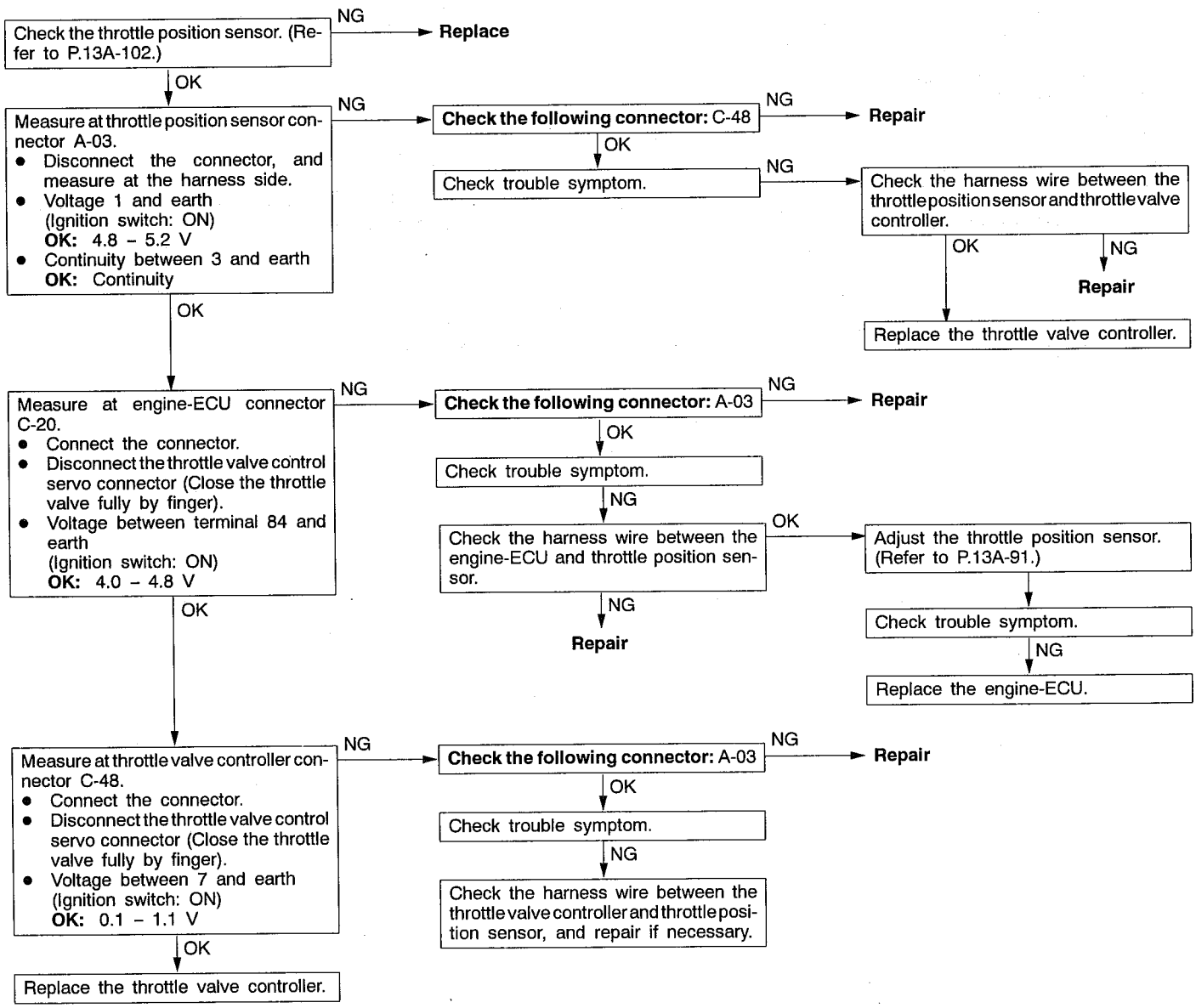

Code No.21 Engine coolant temperature sensor system	Probable cause
Range of check • After 60 seconds have passed since the engine have started Set conditions • Sensor resistance is 50 Ω or less for 4 seconds. or • Sensor resistance is 72 kΩ or more for 4 seconds.	• Malfunction of the engine coolant temperature sensor • Open circuit or short-circuited harness wire of the engine coolant temperature sensor circuit • Malfunction of the engine-ECU
Range of check • After engine starts Set conditions • After 5 minutes or more have passed since the engine coolant temperature after filtering has dropped from 40°C or more to less than this temperature	

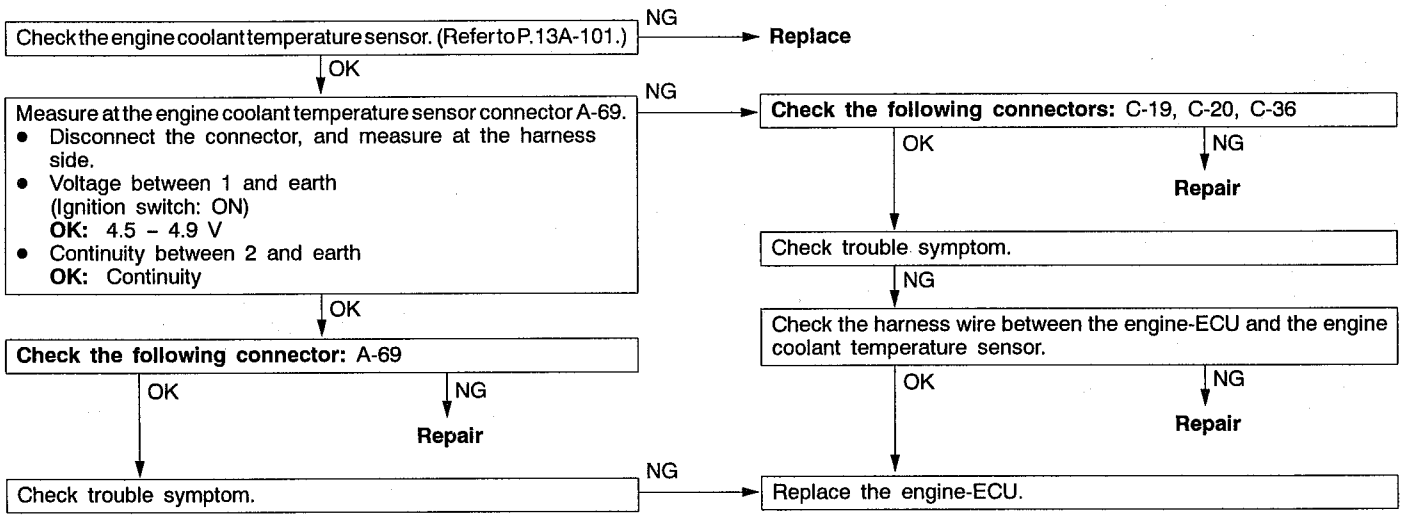

Code No.22 Crank angle sensor system	Probable cause
Range of check • Engine: During cranking Set conditions • Sensor output voltage does not change for 4 seconds (no pulse signal is being input).	• Malfunction of the crank angle sensor • Open circuit or short-circuited harness wire of the crank angle sensor circuit • Malfunction of the engine-ECU

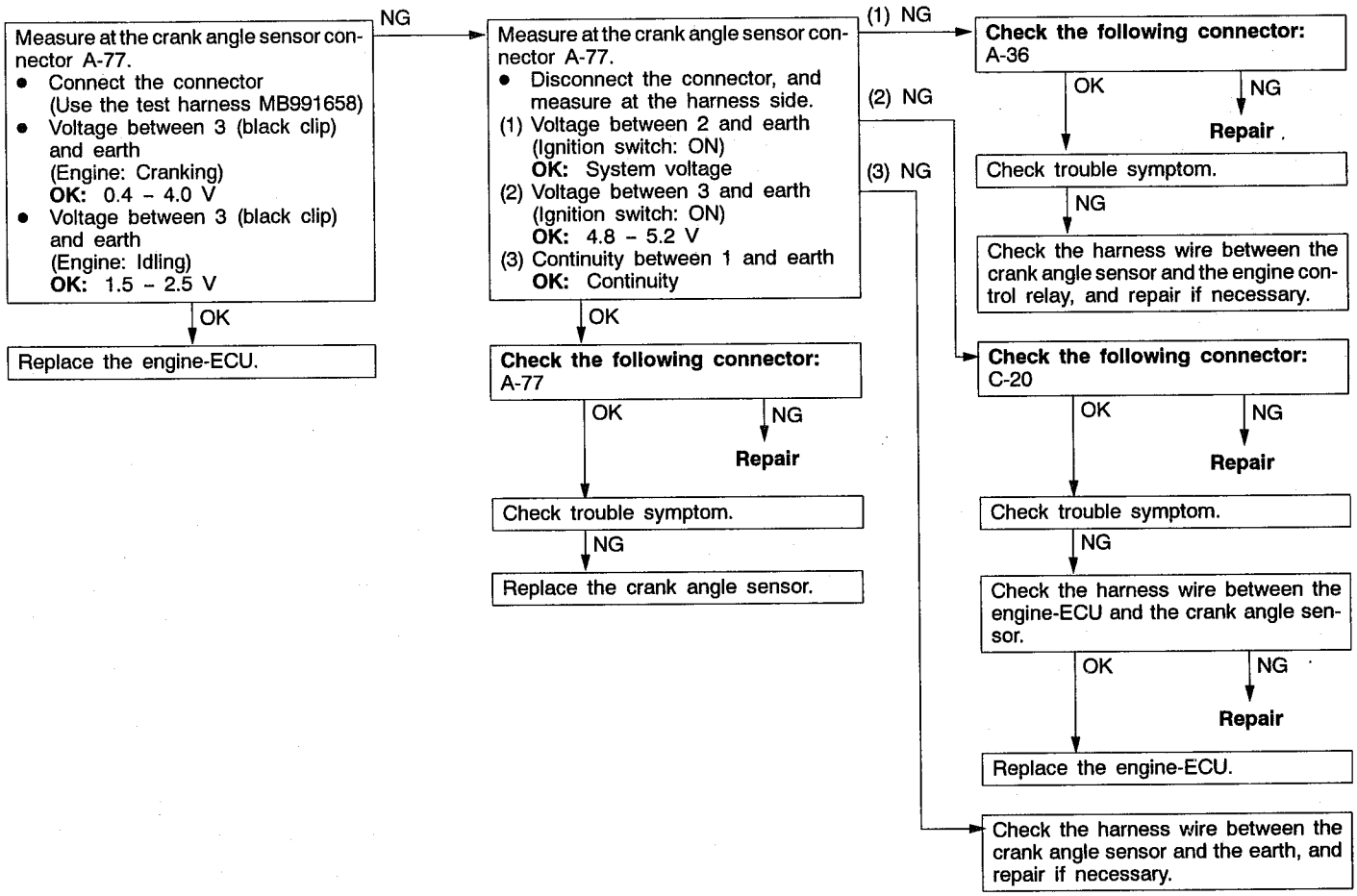

Code No.23 Camshaft position sensor system	Probable cause
Range of check • While engine is cranking or running Set conditions • Sensor output voltage does not change for 4 seconds (no pulse signal is being input).	• Malfunction of the camshaft position sensor • Open circuit or short-circuited harness wire of the camshaft position sensor circuit • Malfunction of the engine-ECU

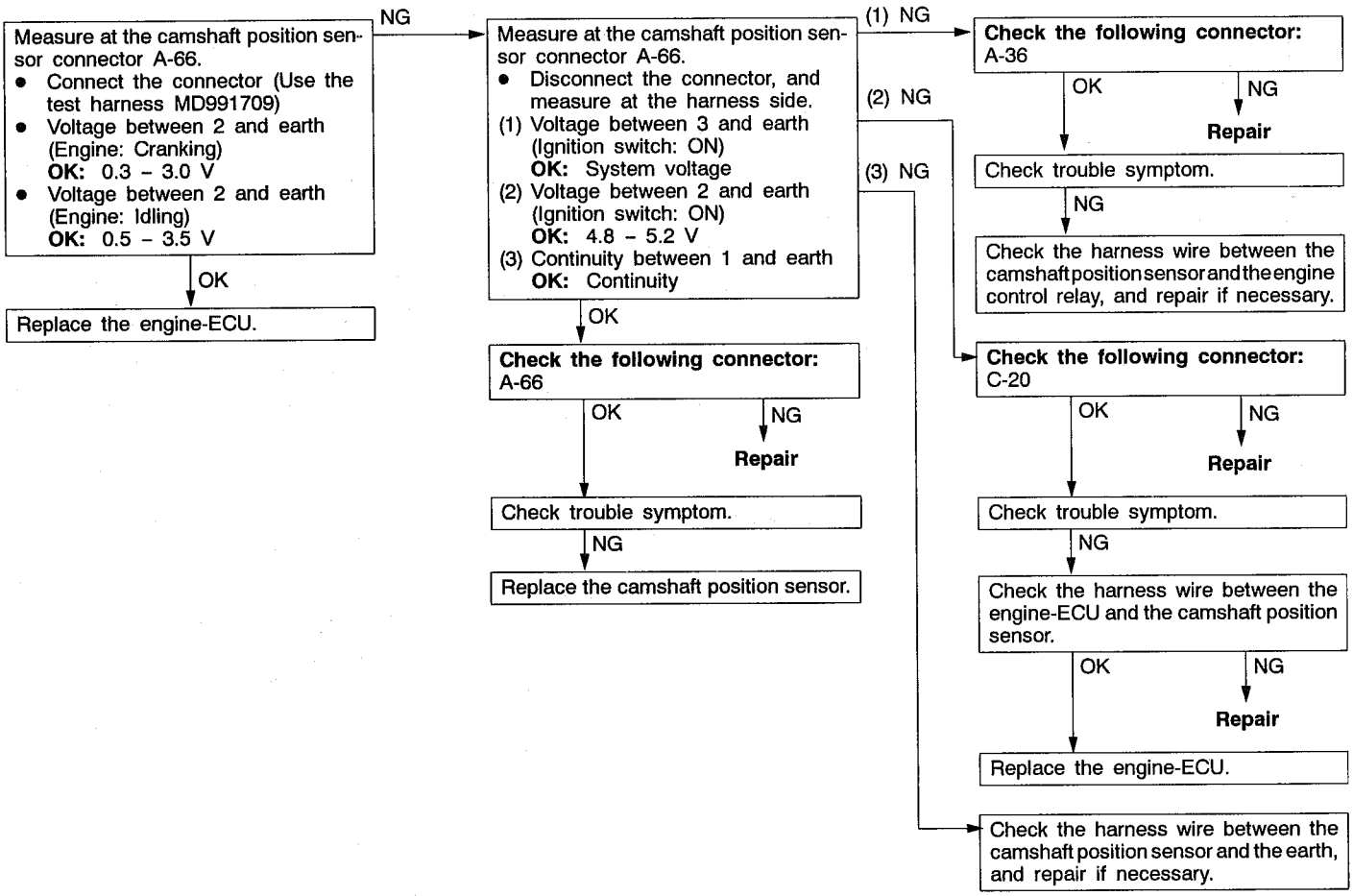

Code No. 24 Vehicles speed sensor system	Probable cause
Range of check • Ignition switch: ON • Excluding 60 seconds after the ignition switch is turned to ON or immediately after the engine starts. • Engine speed is 3,000 r/min or more. • Driving under high engine load conditions. Set conditions • Sensor output voltage does not change for 4 seconds (no pulse signal input).	• Malfunction of the vehicle speed sensor • Improper connector contact, open circuit or short-circuited harness wire of the vehicle speed sensor circuit • Malfunction of the engine-ECU

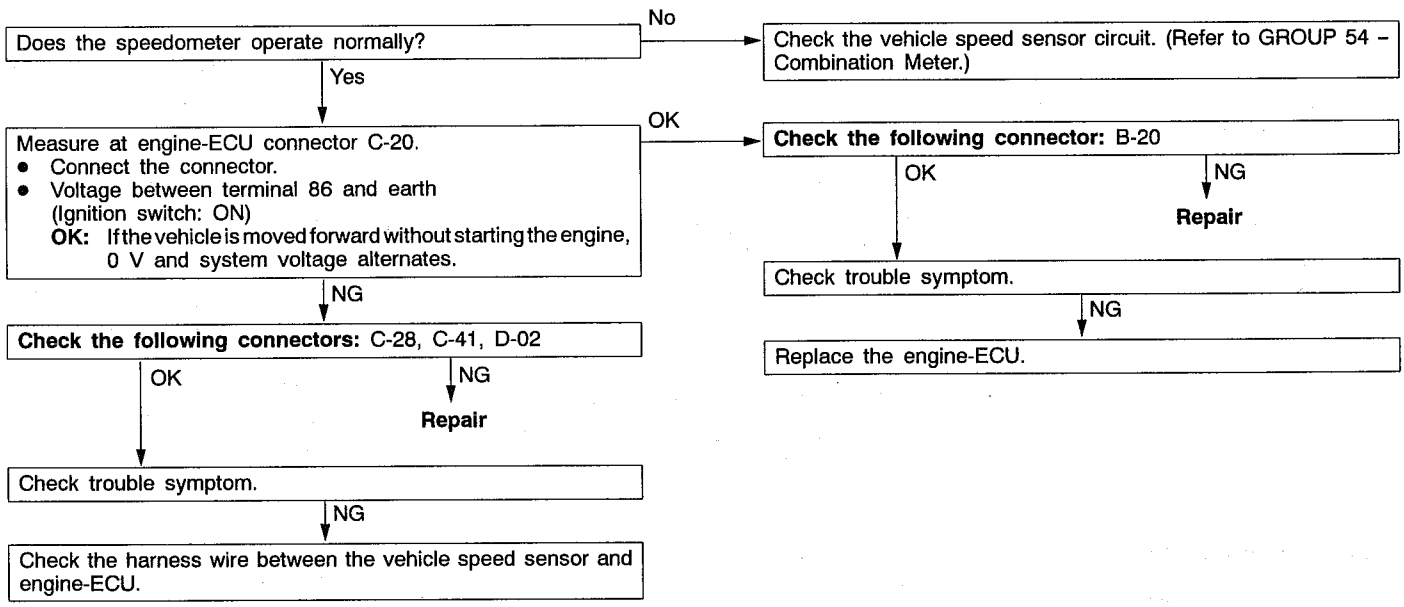

Code No.25 Barometric pressure sensor system	Probable cause
Range of check • After 60 seconds have passed since the engine have started • Battery voltage is 8 V or more. Set conditions • Sensor output voltage is 0.2 V or less for 4 seconds. (This condition corresponds to that the barometric pressure is 53 kPa or less.) or • Sensor output voltage is 4.5 V or more for 4 seconds. (This condition corresponds to that the barometric pressure is 114 kPa or more.)	• Malfunction of the barometric pressure sensor • Open circuit or short-circuited harness wire of the barometric pressure sensor • Malfunction of the engine-ECU

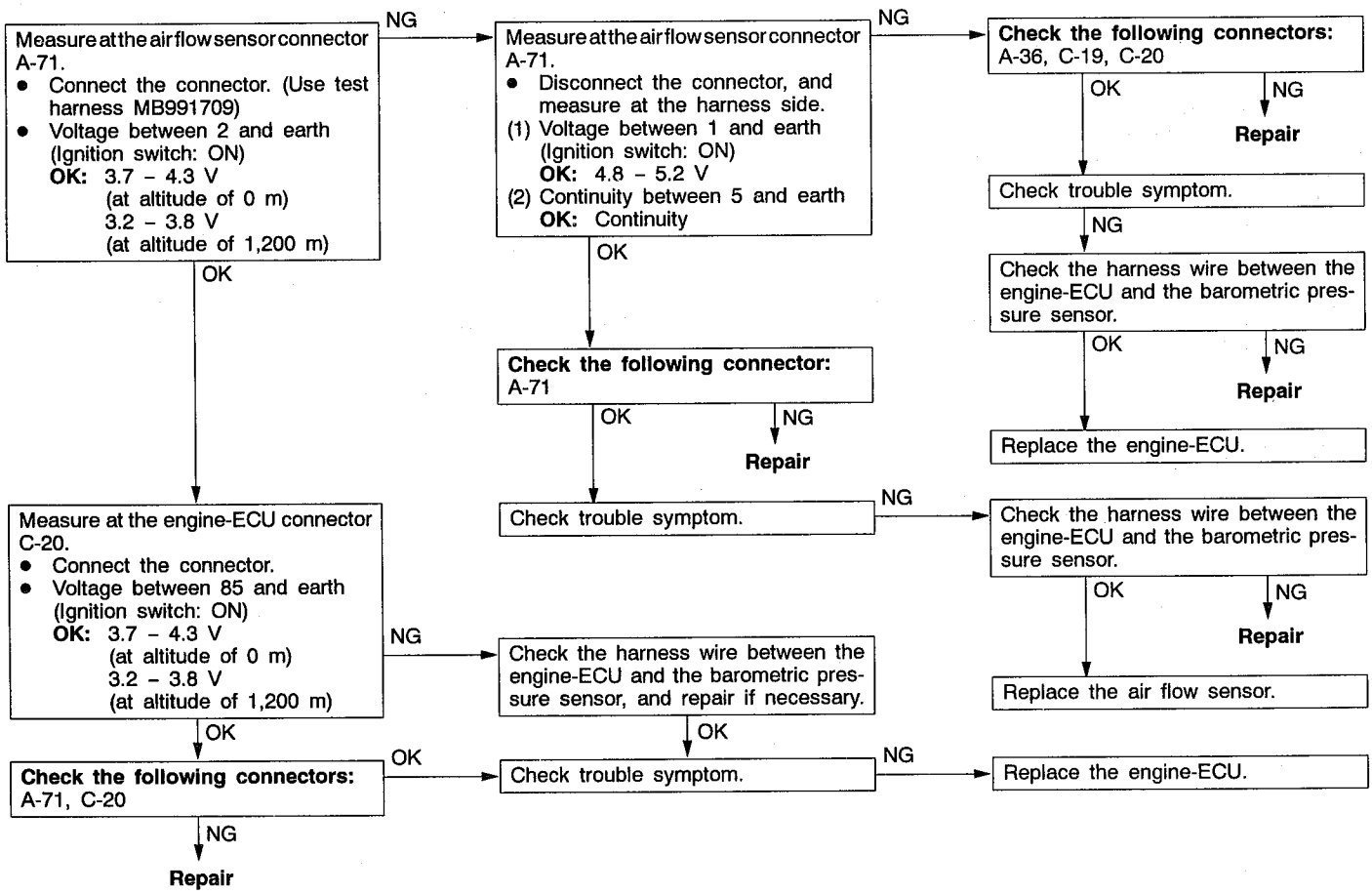

Code No.31 Detonation sensor system	Probable cause
Range of check • After 60 seconds have passed since the engine have started Set conditions • Amount of change in the sensor output voltage (detonation sensor peak voltage for each half rotation of the crankshaft) is 0.06 V or less for 200 continuous times.	• Malfunction of the detonation sensor • Open circuit or short-circuited harness wire of the detonation sensor • Malfunction of the engine-ECU

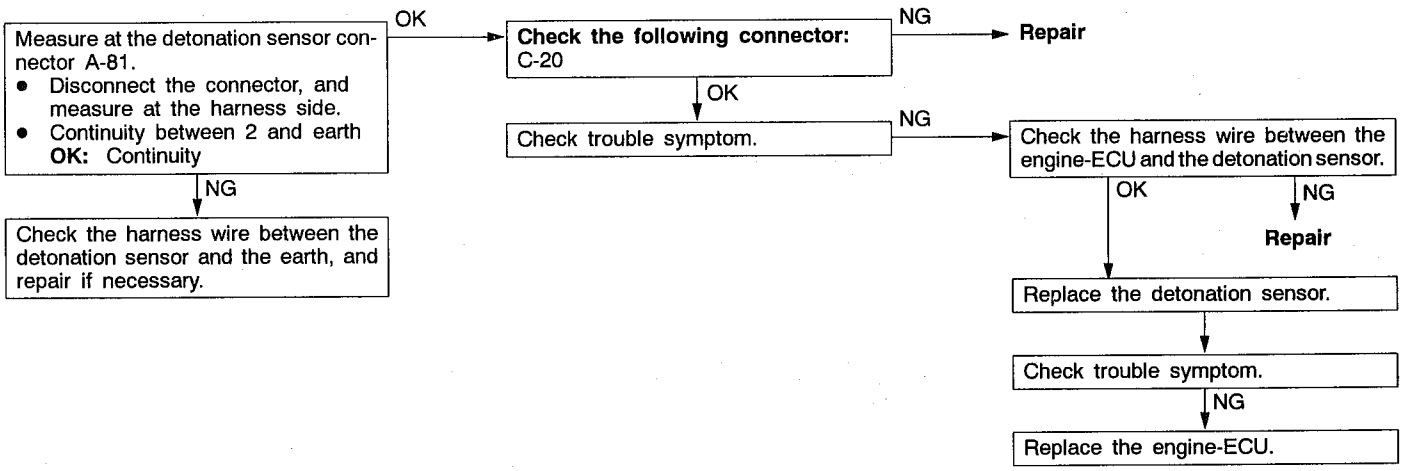

Code No.41 Injector system	Probable cause
Range of check • Engine: while cranking, or running • Engine speed: 4,000 r/min or less • System voltage: 10 V or more • Fuel shut off, or while forcible activating of injector (actuator test) is in operation. Set conditions • Injector open circuit check signal is not output from the injector predetermined time(s).	• Malfunction of the injector • Faulty injector driver relay • Faulty injector driver • Open circuit or short-circuited harness wire in the injector drive circuit, or poor connector contact • Malfunction of the engine-ECU

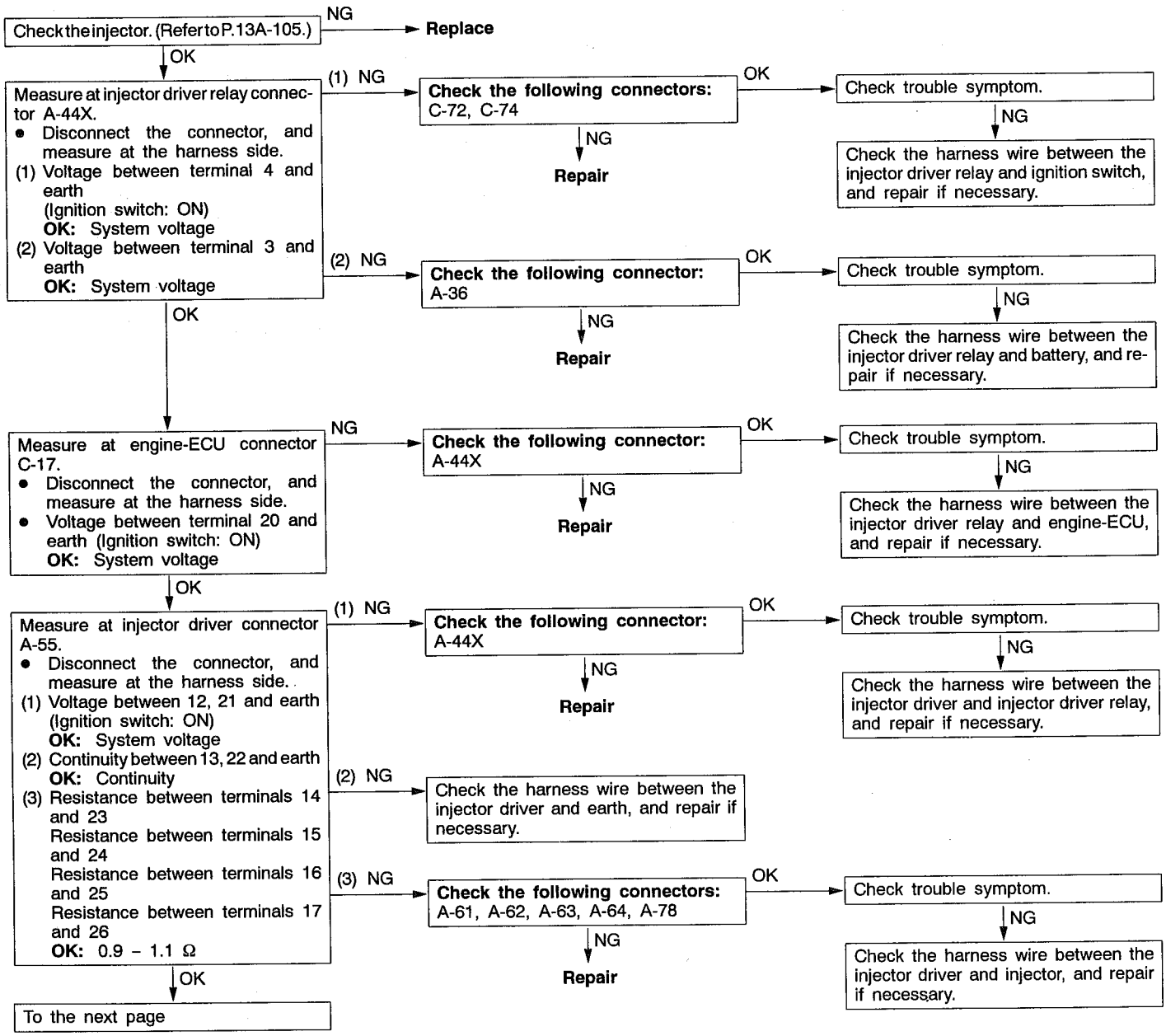

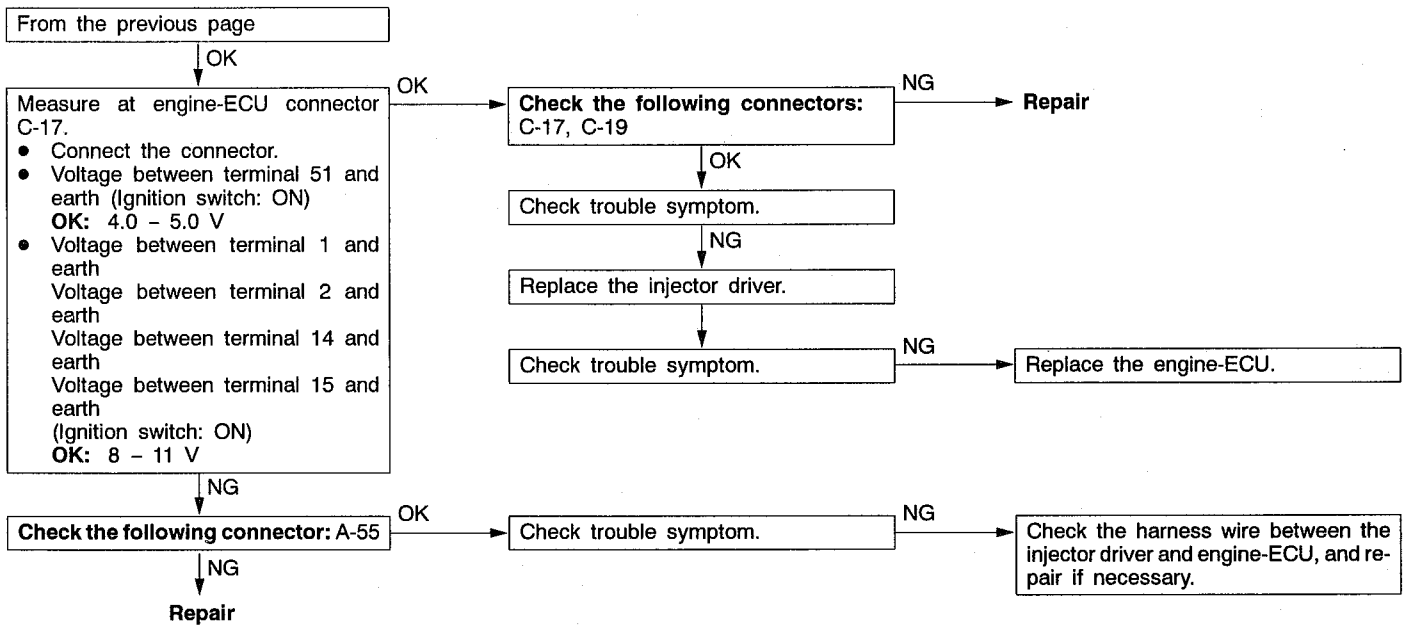
From the previous page
OK
Measure at engine-ECU connector C-17.
• Connect the connector.
• Voltage between terminal 51 and earth (Ignition switch: ON)
OK: 4.0 – 5.0 V
• Voltage between terminal 1 and earth
Voltage between terminal 2 and earth
Voltage between terminal 14 and earth
Voltage between terminal 15 and earth
(Ignition switch: ON)
OK: 8 – 11 V
OK
Check the following connectors: C-17, C-19
NG
Repair
OK
Check trouble symptom.
NG
Replace the injector driver.
Check trouble symptom.
NG
Replace the engine-ECU.
NG
Check the following connector: A-55
OK
Check trouble symptom.
NG
Check the harness wire between the injector driver and engine-ECU, and repair if necessary.
NG
Repair

Code No.44 Abnormal combustion	Probable cause
Range of check • While engine is running during lean fuel combustion Set conditions • Abnormal engine speed due to mis-firing is detected by the crank angle sensor	• Malfunction of the ignition coil • Malfunction of the spark plug • Malfunction of the EGR valve • Open circuit or short-circuit in ignition primary circuit • Malfunction of the engine-ECU

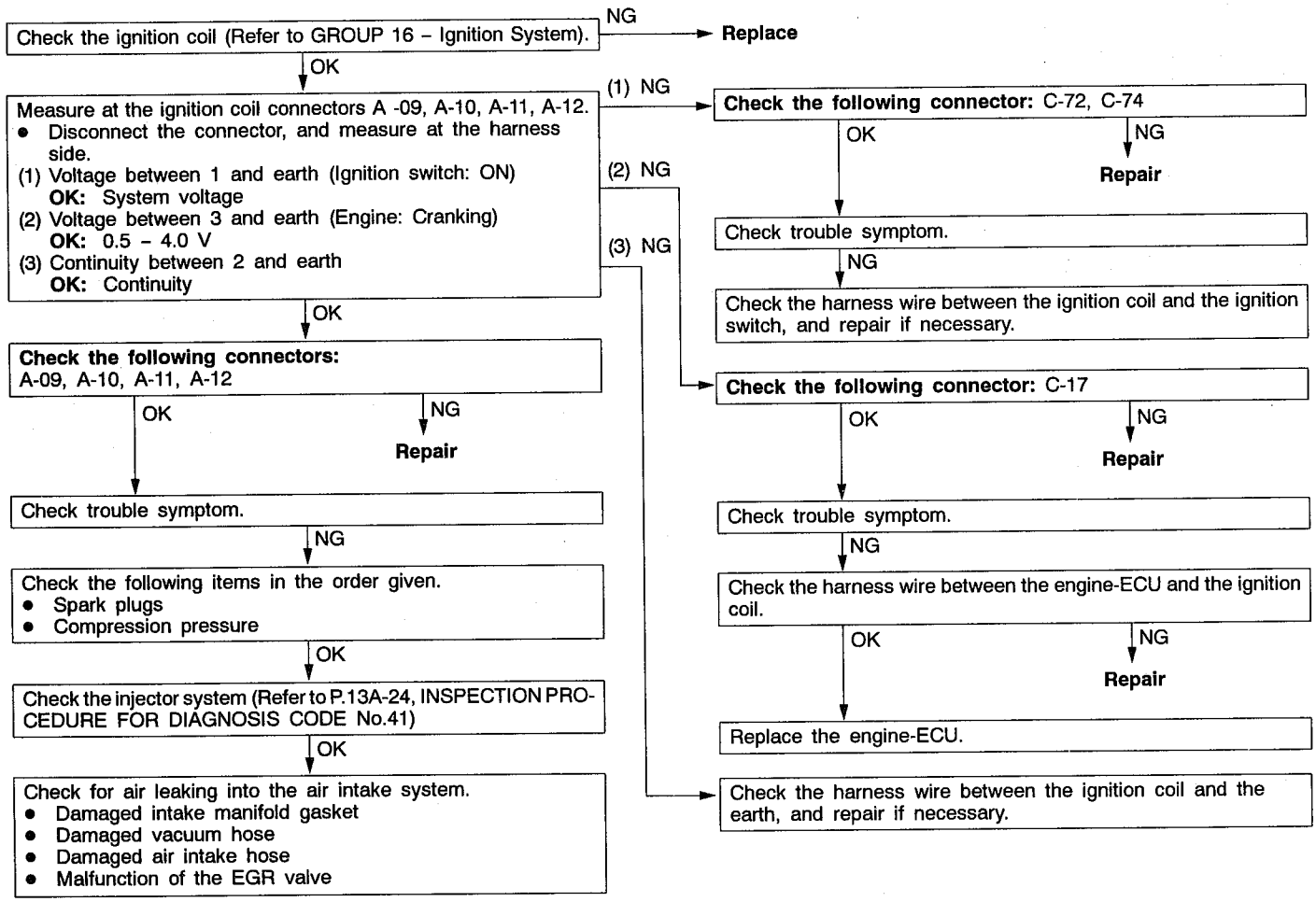

Code No.56 Abnormal fuel pressure	Probable cause
Range of check • Ignition switch: ON Set conditions • Sensor output voltage is 4.8 V or more for four seconds. or • Sensor output voltage is 0.2 V or less for four seconds. Range of check • After the engine is started, the following condition has been detected: (1) Engine speed: 1,000 r/min or more (2) Fuel pressure: 2 MPa or more • While engine is running Set conditions • Fuel pressure is 6.9 MPa or more for four seconds. or • Fuel pressure is 2 MPa or less for four seconds.	• Malfunction of the fuel pressure sensor • Open circuit or short-circuited harness wire of the fuel pressure sensor • Malfunction of the engine-ECU • Malfunction of the fuel pump (high pressure) • Malfunction of the fuel pressure regulator (high pressure) • Clogged high-pressure fuel line
This diagnosis code is also output when air is sucked in high-pressure fuel line due to no fuel supply. In this case, air can be bled by letting the engine run at 2,000 r/min for at least fifteen seconds. After the air bleeding, the diagnosis code must be erased by the MUT-II.	• Air sucking due to no fuel supply

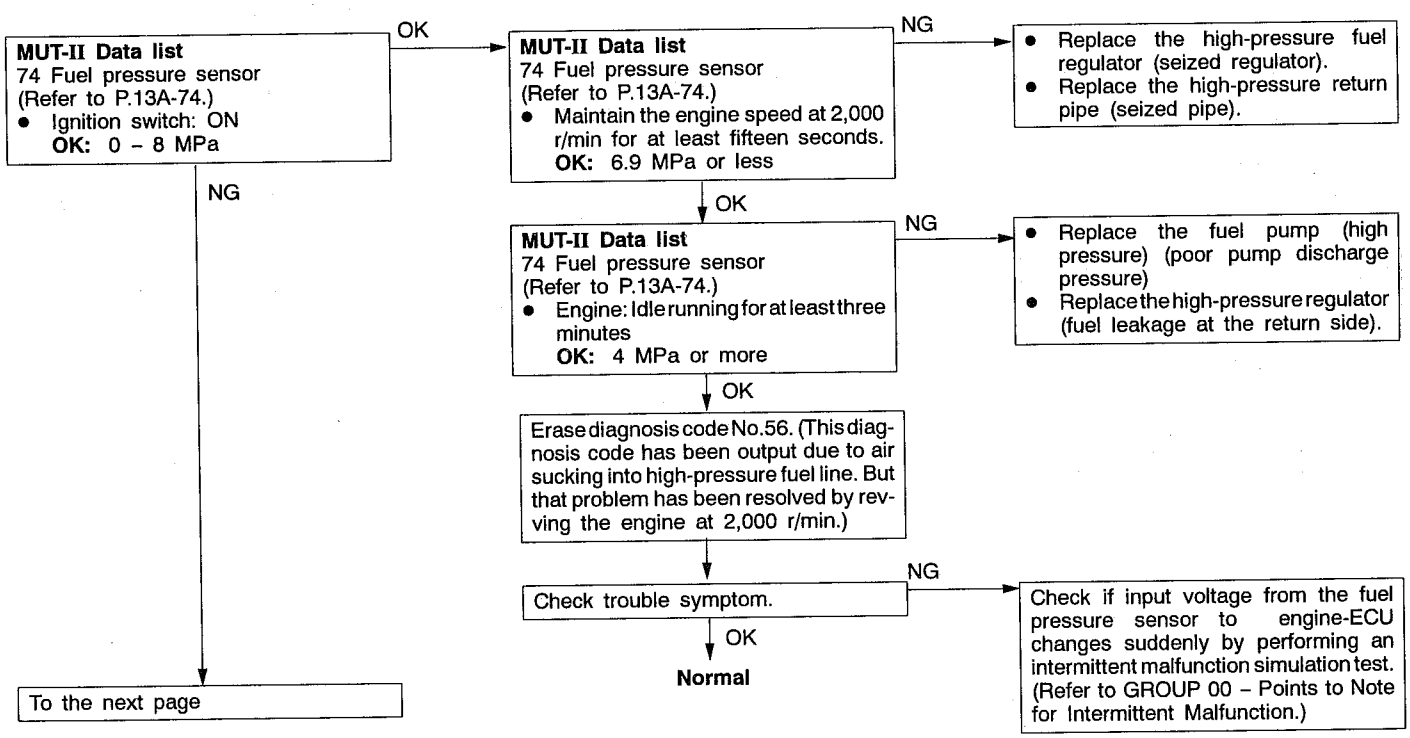

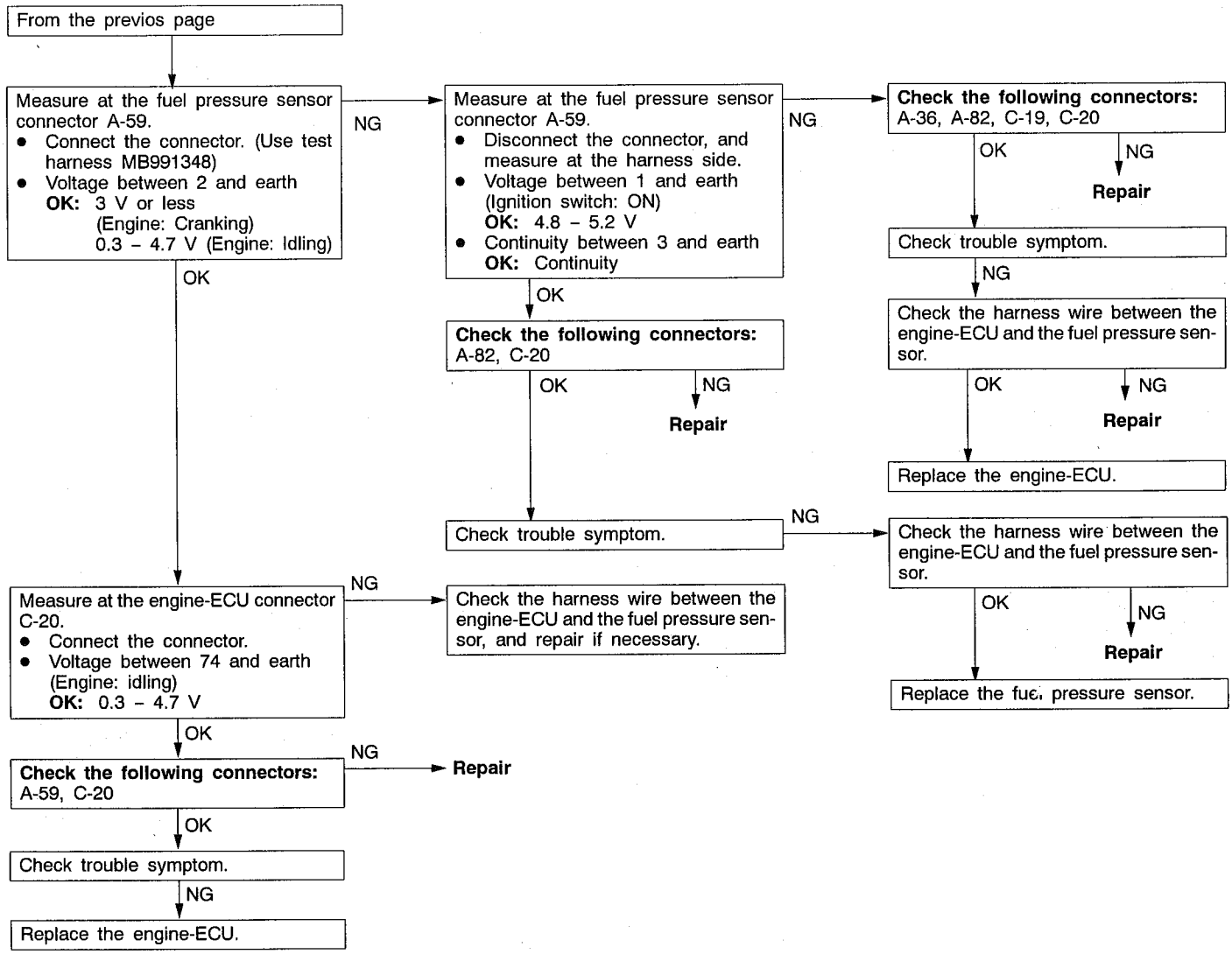
From the previos page
Measure at the fuel pressure sensor connector A-59.
• Connect the connector. (Use test harness MB991348)
• Voltage between 2 and earth
OK: 3 V or less
(Engine: Cranking)
0.3 – 4.7 V (Engine: Idling)
NG
OK
Measure at the fuel pressure sensor connector A-59.
• Disconnect the connector, and measure at the harness side.
• Voltage between 1 and earth (Ignition switch: ON)
OK: 4.8 – 5.2 V
• Continuity between 3 and earth
OK: Continuity
NG
OK
Check the following connectors:
A-82, C-20
OK
NG
Repair
Check trouble symptom.
NG
Check the harness wire between the engine-ECU and the fuel pressure sensor, and repair if necessary.
Check the following connectors:
A-36, A-82, C-19, C-20
OK
NG
Repair
Check trouble symptom.
NG
Check the harness wire between the engine-ECU and the fuel pressure sensor.
OK
NG
Repair
Replace the engine-ECU.
NG
Check the harness wire between the engine-ECU and the fuel pressure sensor.
OK
NG
Repair
Replace the fuel pressure sensor.
Measure at the engine-ECU connector C-20.
• Connect the connector.
• Voltage between 74 and earth (Engine: idling)
OK: 0.3 – 4.7 V
NG
OK
Check the following connectors:
A-59, C-20
NG
Repair
OK
Check trouble symptom.
NG
Replace the engine-ECU.

Code No.61 Communication wire with A/T-ECU system	Probable cause
Range of check • After 60 seconds have passed since the engine have started Set conditions • Torque reduction request signal from A/T-ECU is input continuously for 1.5 seconds or more.	• Short circuit in ECU communication circuit • Malfunction of the engine-ECU • Malfunction of the A/T-ECU

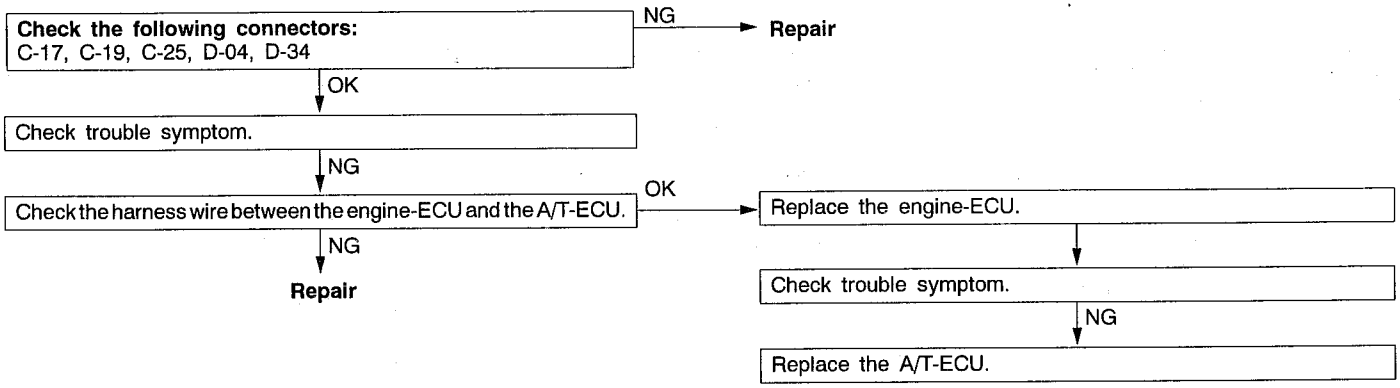

Code No.64 Alternator FR terminal system	Probable cause
Range of check • Engine speed is 50 r/min or more. Set conditions • Input voltage from the alternator FR terminal is system voltage for 20 seconds.	• Open circuit in alternator FR terminal circuit • Malfunction of the engine-ECU

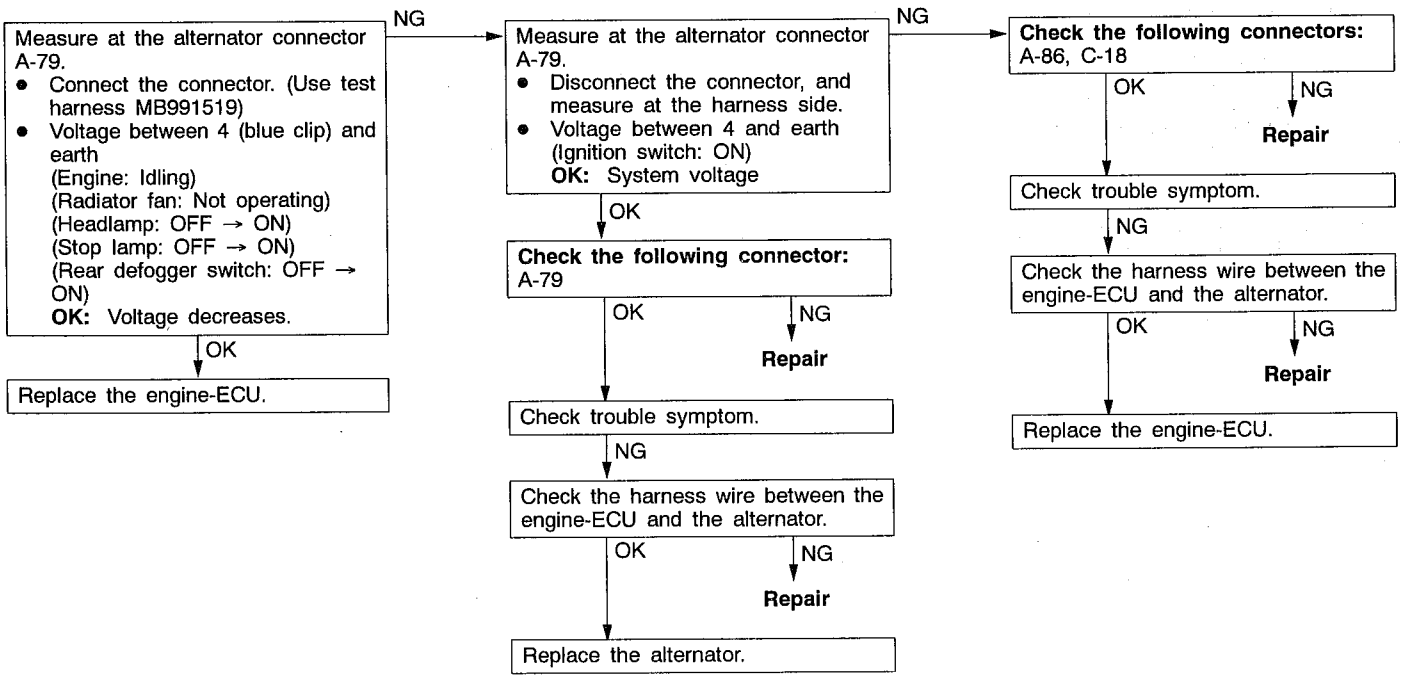

Code No.66 Brake vacuum sensor system	Probable cause
Range of check • Ignition switch: ON Set conditions • Sensor output voltage is 4.8 V or more. or • Sensor output voltage is 0.2 V or less.	• Malfunction of the brake vacuum sensor • Improper connector contact, open circuit or short-circuited harness wire of the brake vacuum sensor • Malfunction of the engine-ECU

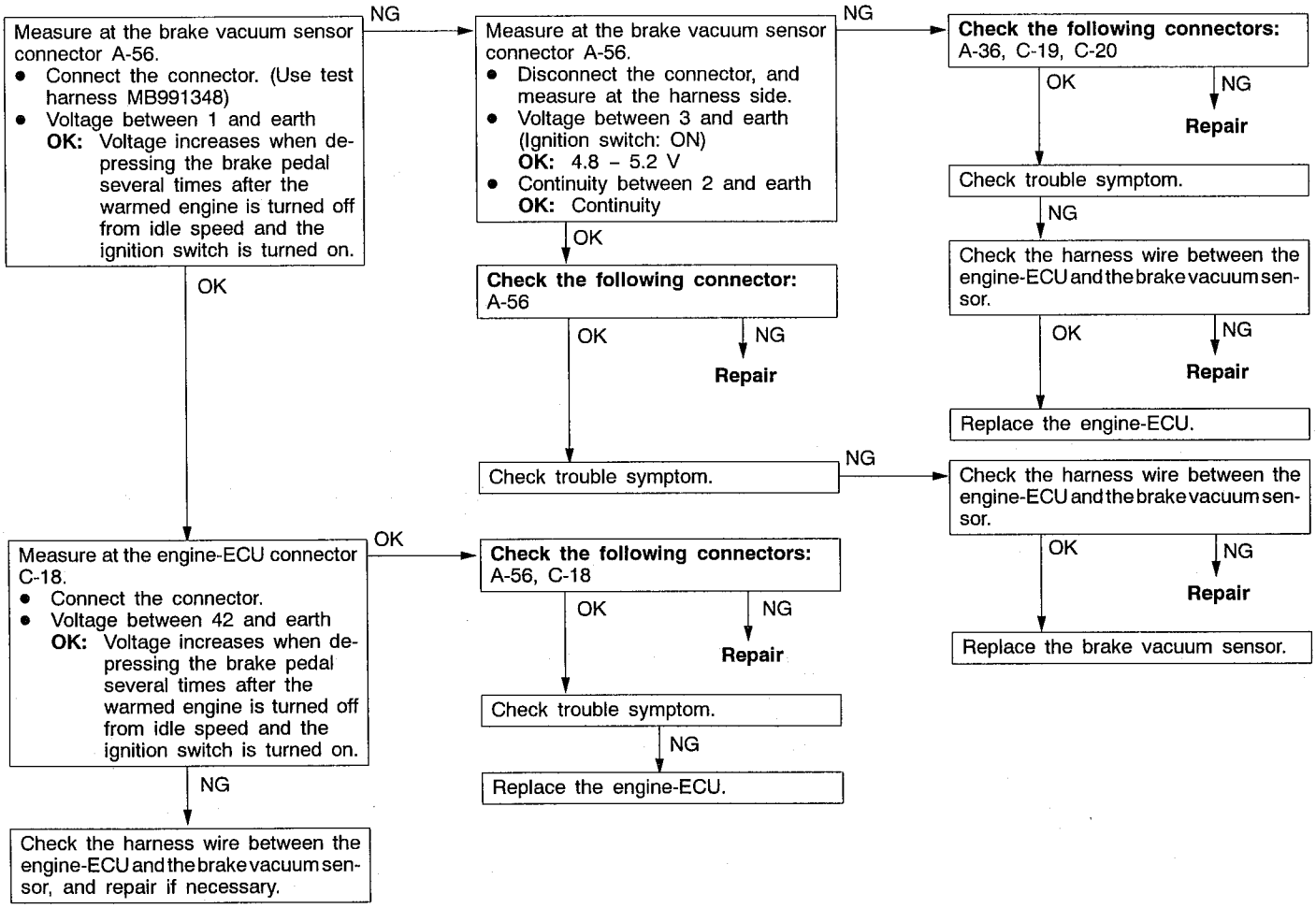

Code No.77 Accelerator pedal position sensor (2nd channel) system	Probable cause
Range of check • Accelerator pedal position sensor (1st channel) system is normal. • Communication between the engine-ECU and throttle valve controller is normal. Set conditions • Output voltage of accelerator pedal position sensor (2nd channel) system is 0.2 V or less for one second. or • Output voltage of the accelerator pedal position sensor (1st channel) is 2.5 V or less, and output voltage of the accelerator pedal position sensor (2nd channel) is 4.5 V or more for one second. or • Difference between the accelerator pedal position sensor output voltages (1st and 2nd channels) exceeds 1.0 V (i.e. when the throttle valve opening angle changes slightly).	• Malfunction of the accelerator pedal position sensor (2nd channel) • Open circuit or short-circuited harness wire in the accelerator pedal position sensor (2nd channel) system, or poor connector contact • Malfunction of the throttle valve controller • Malfunction of the engine-ECU

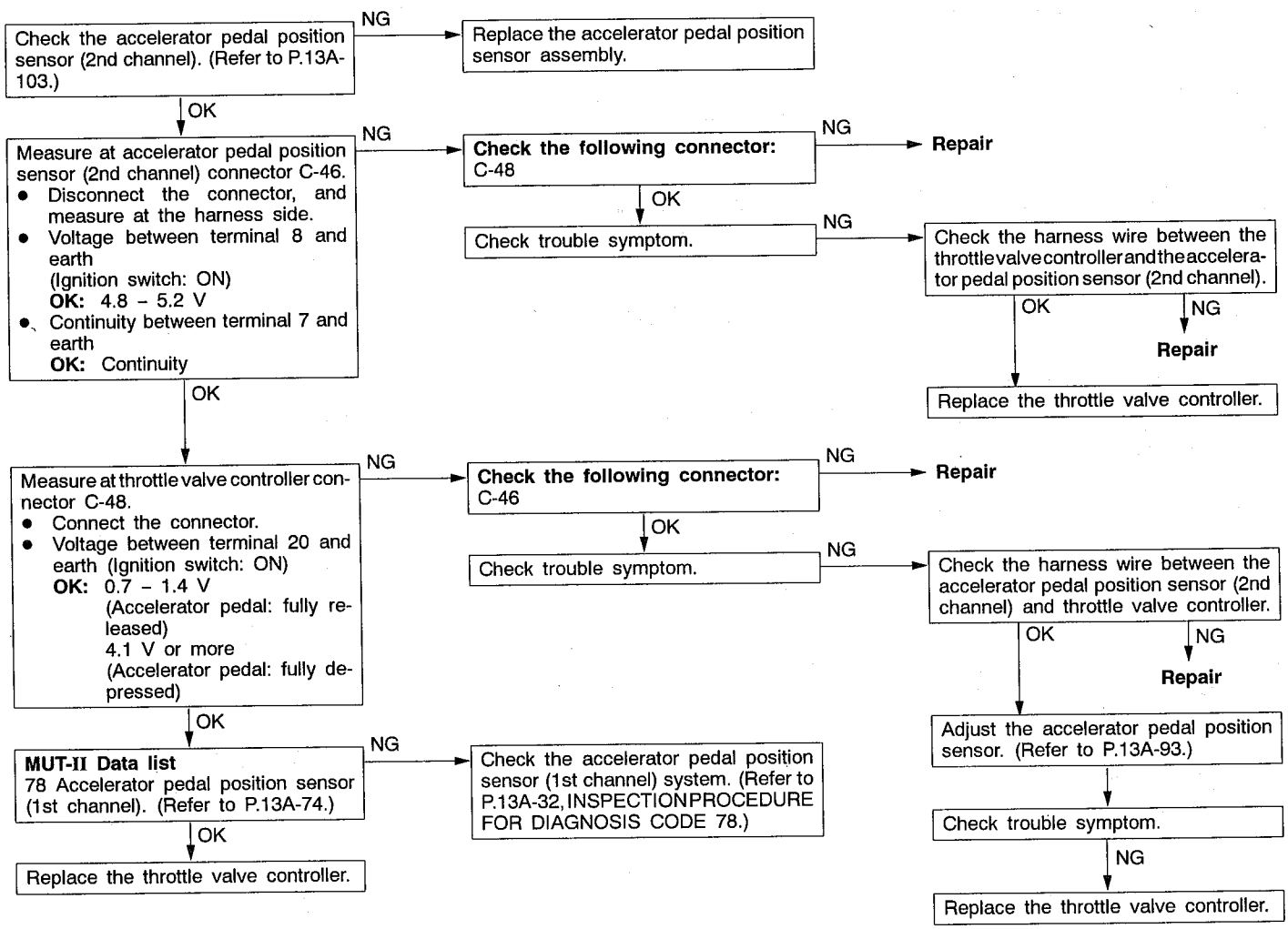

Code No.78 Accelerator pedal position sensor (1st channel) system	Probable cause
Range of check • Accelerator pedal position sensor (2nd channel) system is normal. • Communication between the engine-ECU and throttle valve controller is normal. Set conditions • Output voltage of accelerator position sensor (1st channel) system is 0.2 V or less for one second. or • Output voltage of the accelerator pedal position sensor (2nd channel) is 2.5 V or less, and (1st channel) output voltage of the accelerator pedal position sensor is 4.5 V or more for one second. or • Difference between the accelerator pedal position sensor (1st and 2nd channels) output voltages exceeds 1.0 V (i.e. when the throttle valve opening angle changes slightly). or • Although the accelerator pedal position switch is on, 1st-channel output voltage of the accelerator pedal position sensor exceeds 1.1 V for one second.	• Malfunction of the accelerator pedal position sensor (1st channel) • Open circuit or short-circuited harness wire in the accelerator pedal position sensor (1st channel) system, or poor connector contact • ON-seizure of the accelerator pedal position switch • Malfunction of the throttle valve controller • Malfunction of the engine-ECU

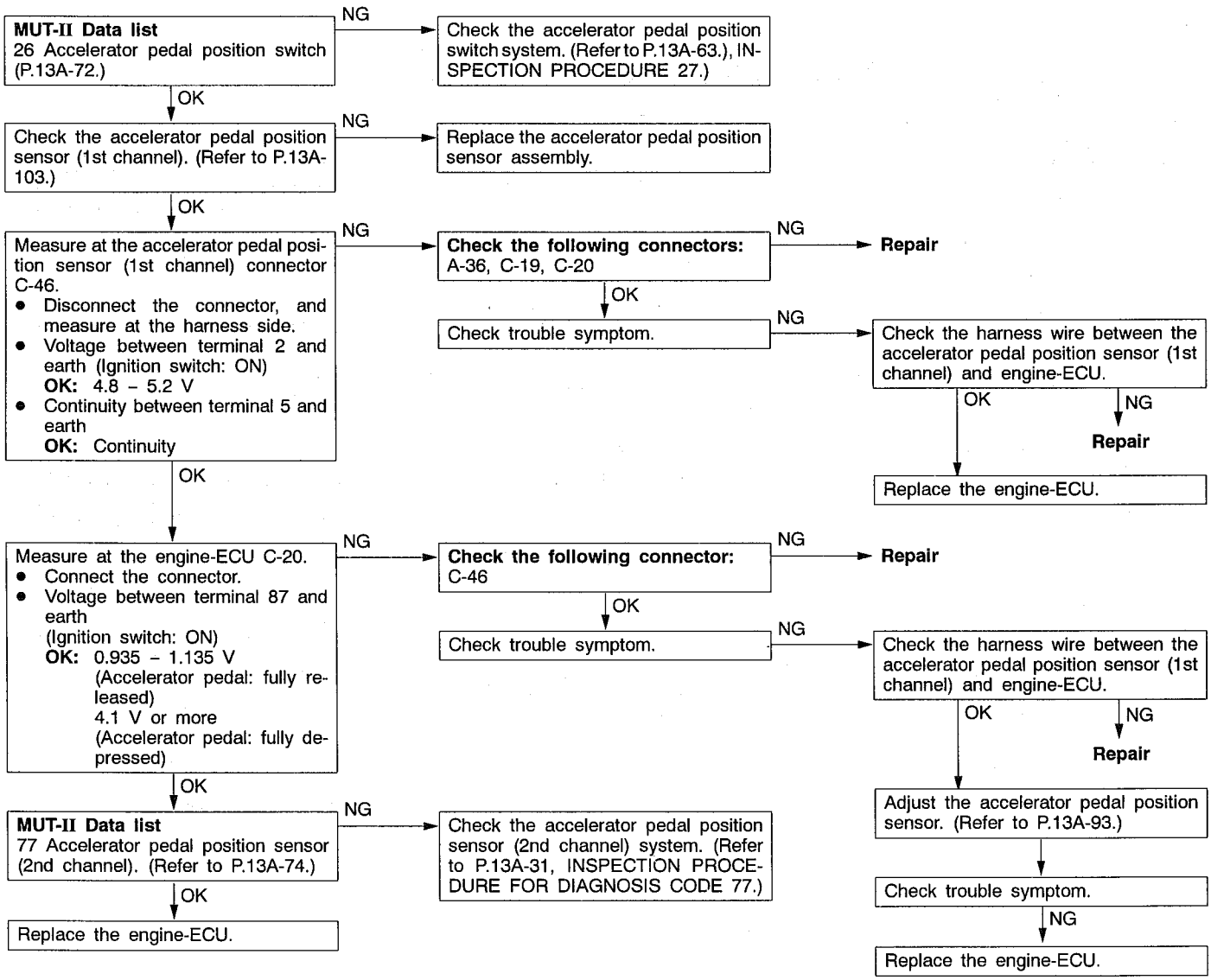

Code No.79 Throttle position sensor (1st channel) system	Probable cause
The throttle valve controller determines a failure, and sends it result to the engine-ECU. Range of check • Ignition switch: ON • System voltage: 8 V or more Set conditions • Output voltage of the sensor remains 0.2 V for one second. or • Output voltage of the sensor remains 4.9 V for one second. or • Output voltage of the throttle position sensor (1st and 2nd channels) remains outside 4 – 6 V for four seconds.	• Malfunction of the throttle position sensor (1st channel) • Open circuit or short-circuited harness wire in the throttle position sensor (1st channel), or poor connector contact • Malfunction of the throttle valve controller • Malfunction of the engine-ECU

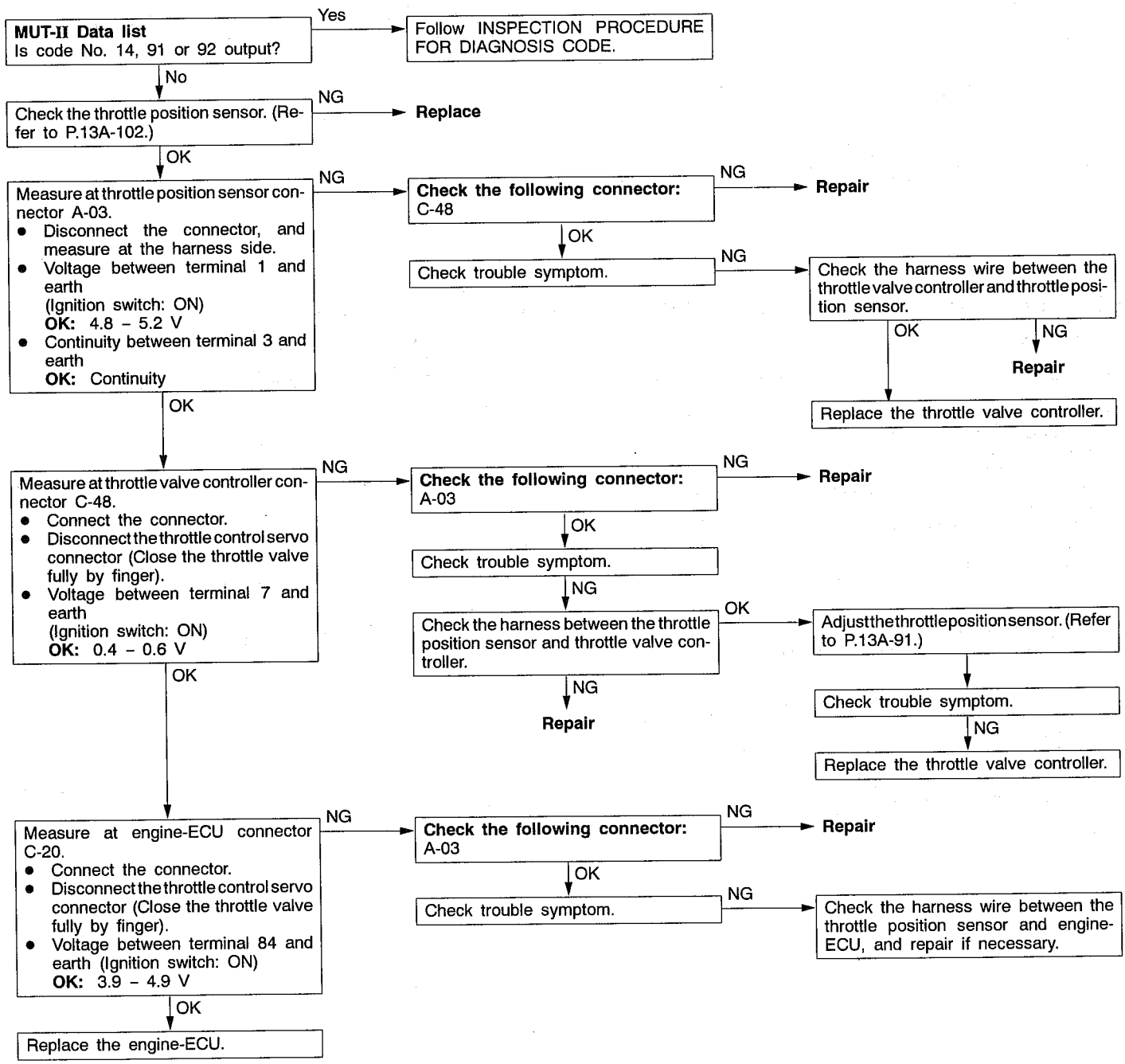

Code No.89 Abnormal fuel pressure system	Probable cause
Range of check • Engine: Idling (during stoichio-feedback operation) Set conditions • Fuel injection correction value remains excessively low for ten seconds or more. or • Fuel injection correction value remains excessively high for ten seconds or more.	• Malfunction of the fuel pump (high pressure) • Malfunction of the intake air temperature sensor • Malfunction of the barometric pressure sensor • Malfunction of the air flow sensor • Malfunction of the engine-ECU

MUT-II Data list
13 Intake air temperature sensor. (Refer to P.13A-70.)
→ NG → Check the intake air temperature sensor system. (Refer to P.13A-16, INSPECTION PROCEDURE FOR DIAGNOSIS CODE No.13.)
↓ OK

MUT-II Data list
25 Barometric air temperature sensor. (Refer to P.13A-72.)
→ NG → Check the barometric pressure sensor system. (Refer to P.13A-22, INSPECTION PROCEDURE FOR DIAGNOSIS CODE No.25.)
↓ OK

MUT-II Data list
12 Air flow sensor. (Refer to P.13A-70.)
→ NG → Check the air flow sensor system. (Refer to P.13A-15, INSPECTION PROCEDURE FOR DIAGNOSIS CODE No.12.)
↓ OK

Replace the fuel pump (high pressure).

Code No.91 Electronic-controlled throttle valve system	Probable cause
Range of check • Ignition switch: ON • Error in communication from the engine-ECU to throttle valve controller Set conditions • Output voltage of the throttle position sensor (2nd channel) fluctuates significantly (approx. 1 V or more) from an expected value. Range of check • Ignition switch: ON • Error in communication from the throttle valve controller to engine-ECU Set conditions • The throttle valve opening angle (voltage) which the engine-ECU requested of the throttle valve controller is significantly different from output voltage of the (2nd channel) throttle position sensor (approx. one volt).	• Short in communication line • Malfunction of the engine-ECU • Malfunction of the throttle valve controller

MUT-II Self-Diag code
Is any other diagnosis code than No.94 output?
→ Yes → Follow INSPECTION PROCEDURE FOR DIAGNOSIS CODE.
↓ No

Check the harness wire between the throttle valve controller and engine-ECU.
→ NG → **Repair**
↓ OK

Replace the throttle valve controller.

Code No.92 Throttle valve position feedback system	Probable cause
The throttle valve controller determines if a failure is present, and sends its result to the engine-ECU. Range of check • Ignition switch: ON • System voltage: 8 V or more Set condition • Motor position feedback system is defective (System detects a motor overcurrent, or that actual and projected opening angles of the throttle position sensor (1st channel) are different by 1.0 V or more.	• Malfunction of the throttle position sensor (1st channel) • Open circuit or short-circuited harness wire in the throttle position sensor system (1st channel), or poor connector contact • Malfunction of the throttle valve controller

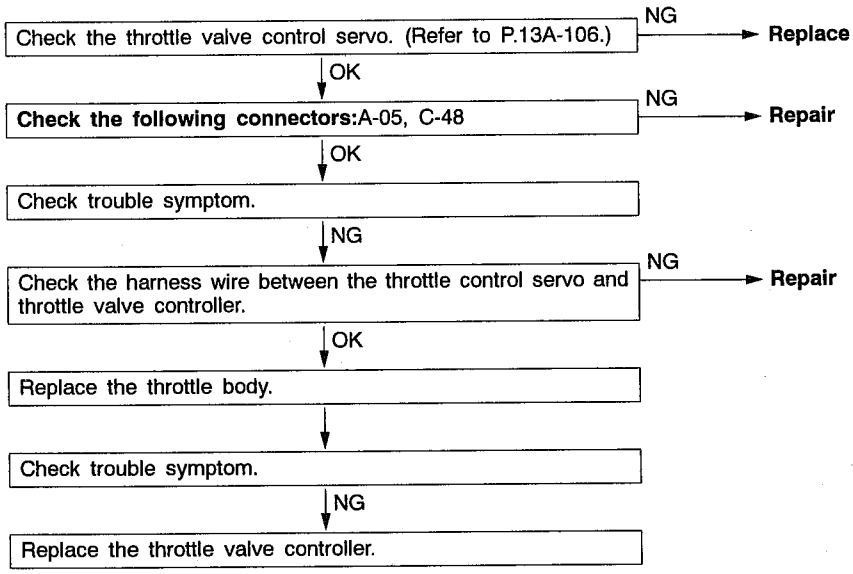

Code No.94 Communication line system with throttle valve controller	Probable cause
Range of check • Ignition switch: ON • System voltage: 8 V or more • Engine: not cranking Set condition • System detects an error in communication line between the engine-ECU and throttle valve controller.	• Short circuit in communication line • Malfunction of the engine-ECU • Malfunction of the throttle valve controller

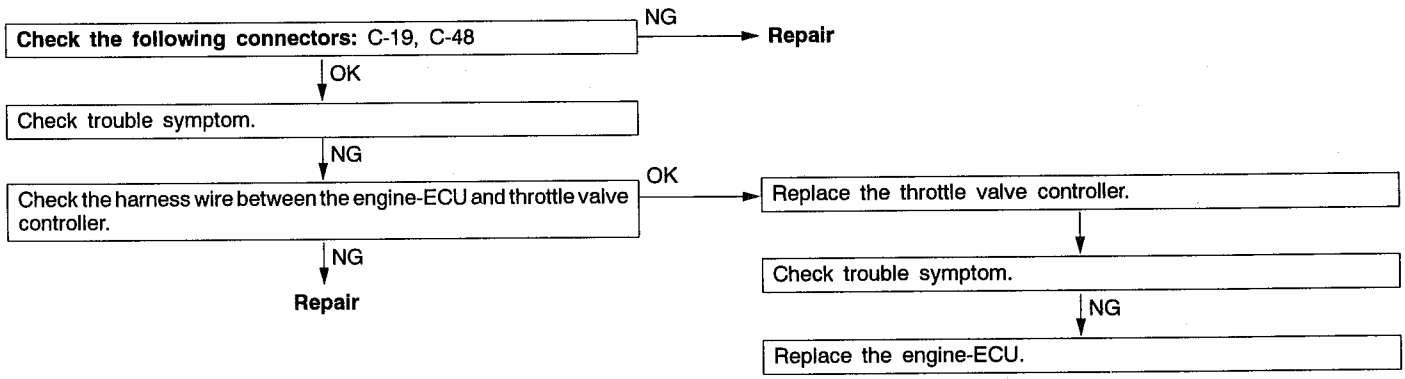

Code No.95 Malfunction in throttle valve control servo motor (1st motor) system	Probable cause
Range of check • Throttle valve control servo relay: ON • System voltage: 8 V or more Set conditions • Throttle valve control servo drive circuit is shorted to earth. • Other power source interferences with throttle valve control servo drive circuit. • Throttle valve control servo drive circuit is open circuit.	• Malfunction of the throttle valve control servo • Open circuit or short-circuited harness wire in throttle valve control servo system, or poor connector contact • Malfunction of the throttle valve controller

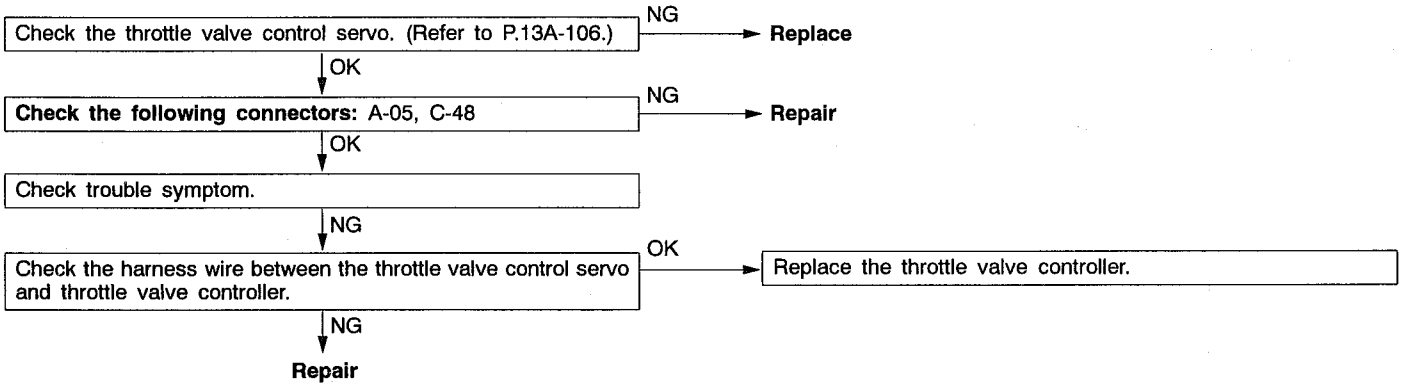

Code No.99 Malfunction in throttle valve control servo motor (2nd motor) system	Probable cause
Range of check • Throttle valve control servo relay: ON • System voltage: 8V or more Set conditions • Throttle valve control servo drive circuit is shorted to earth. • Other power source interferes with throttle valve control servo drive circuit. • Throttle valve control servo drive circuit is open-circuited.	• Malfunction of the throttle valve control servo • Open circuit or short-circuited harness wire in the throttle valve control servo system, or poor connector contact • Malfunction of the throttle valve controller

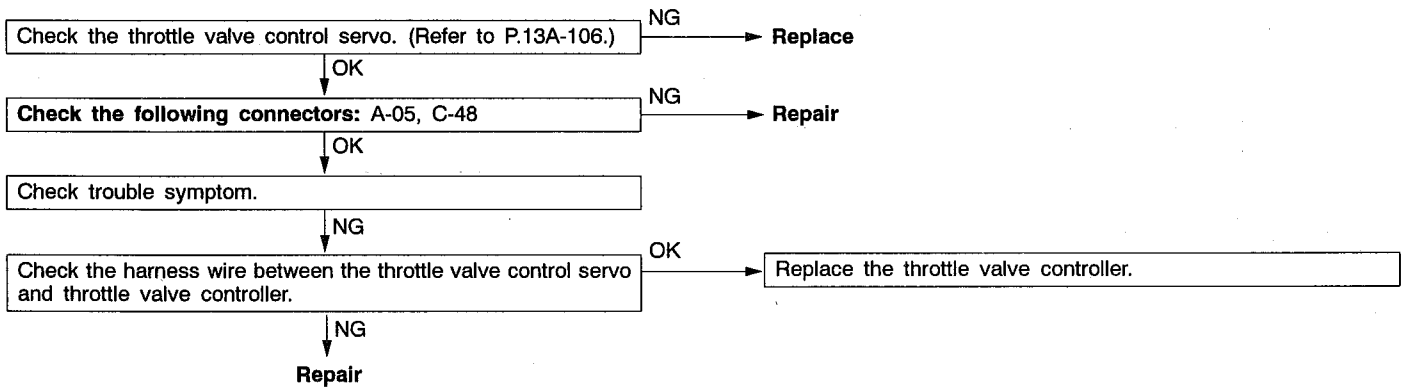

INSPECTION CHART FOR TROUBLE SYMPTOMS

Trouble symptom		Inspection procedure No.	Reference page
Communication with MUT-II is impossible.	Communication with all systems is not possible.	1	13A-39
	Communication with engine-ECU only is not possible.	2	13A-40
Engine warning lamp and related parts	The engine warning lamp does not illuminate right after the ignition switch is turned to the ON position.	3	13A-40
	The engine warning lamp remains illuminating and never goes out.	4	13A-41
Starting	No initial combustion (starting impossible)	5	13A-41
	Initial combustion but no complete combustion (starting impossible)	6	13A-43
	Long time to start (improper starting)		
Idling stability (Improper idling)	Unstable idling (Rough idling, hunting)	7	13A-45
	Idling speed is high. (Improper idling speed)	8	13A-47
	Idling speed is low. (Improper idling speed)		
Idling stability (Engine stalls)	When the engine is cold, it stalls at idling. (Die out)	9	13A-48
	When the engine is hot, it stalls at idling. (Die out)	10	13A-49
	The engine stalls when starting the car. (Pass out)	11	13A-51
	The engine stalls when decelerating.	12	13A-52
Driving	Hesitation, sag or stumble	13	13A-53
	Poor acceleration		
	Surge		
	The feeling of impact or vibration when accelerating	14	13A-54
	The feeling of impact or vibration when decelerating	15	13A-55
	Knocking	16	13A-55
Dieseling		17	13A-55
Too high CO and HC concentration when idling		18	13A-56
Low alternator output voltage (approx. 12.3 V)		19	13A-57
Fans (radiator fan, A/C condenser fan) are inoperative		20	13A-58
GDI ECO indicator lamp	GDI ECO indicator lamp does not illuminate.	21	13A-59
	GDI ECO indicator lamp remains illuminated and does not go off.	22	13A-59

PROBLEM SYMPTOMS TABLE (FOR YOUR INFORMATION)

Items		Symptom
Starting	Won't start	The starter is used to crank the engine, but there is no combustion within the cylinders, and the engine won't start.
	Fires up and dies	There is combustion within the cylinders, but then the engine soon stalls.
	Hard starting	Engine starts after cranking a while.
Idling stability	Hunting	Engine speed doesn't remain constant; changes at idle.
	Rough idle	Usually, a judgement can be based upon the movement of the tachometer pointer, and the vibration transmitted to the steering wheel, shift lever, body, etc. This is called rough idle.
	Incorrect idle speed	The engine doesn't idle at the usual correct speed.
	Engine stall (Die out)	The engine stalls when the foot is taken from the accelerator pedal, regardless of whether the vehicles is moving or not.
	Engine stall (Pass out)	The engine stalls when the accelerator pedal is depressed or while it is being used.
Driving	Hesitation, Sag	"Hesitation" is the delay in response of the vehicle speed (engine speed) that occurs when the accelerator is depressed in order to accelerate from the speed at which the vehicle is now traveling, or a temporary drop in vehicle speed (engine speed) during such acceleration. Serious hesitation is called "sag". 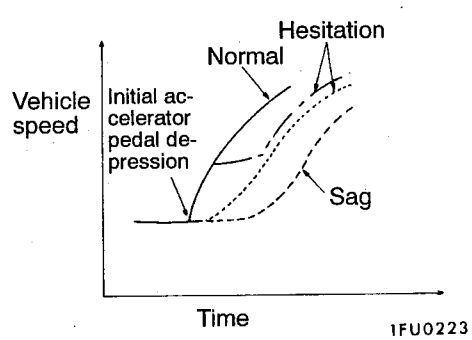
	Poor acceleration	Poor acceleration is inability to obtain an acceleration corresponding to the degree of throttle opening, even though acceleration is smooth, or the inability to reach maximum speed.
	Stumble	Engine speed increase is delayed when the accelerator pedal is initially depressed for acceleration. 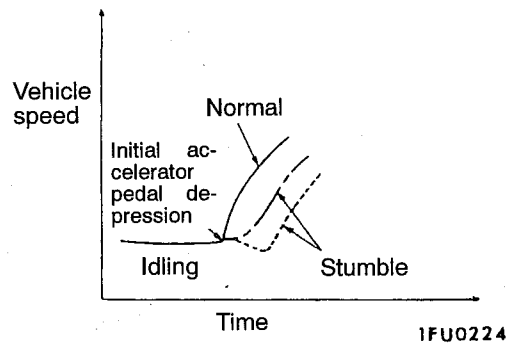

Items		Symptom
Driving	Shock	The feeling of a comparatively large impact or vibration when the engine is accelerated or decelerated.
	Surge	This is repeated surging ahead during constant speed travel or during variable speed travel.
	Knocking	A sharp sound like a hammer striking the cylinder walls during driving and which adversely affects driving.
Stopping	Run on ("Dieseling")	The condition in which the engine continues to run after the ignition switch is turned to OFF. Also called "Dieseling".

INSPECTION PROCEDURE FOR TROUBLE SYMPTOMS

INSPECTION PROCEDURE 1

Communication with MUT-II is not possible. (Communication with all systems is not possible.)	**Probable cause**
The cause is probably a defect in the power supply system (including earth) for the diagnosis line.	• Malfunction of the connector • Malfunction of the harness wire • Malfunction of the MUT-II

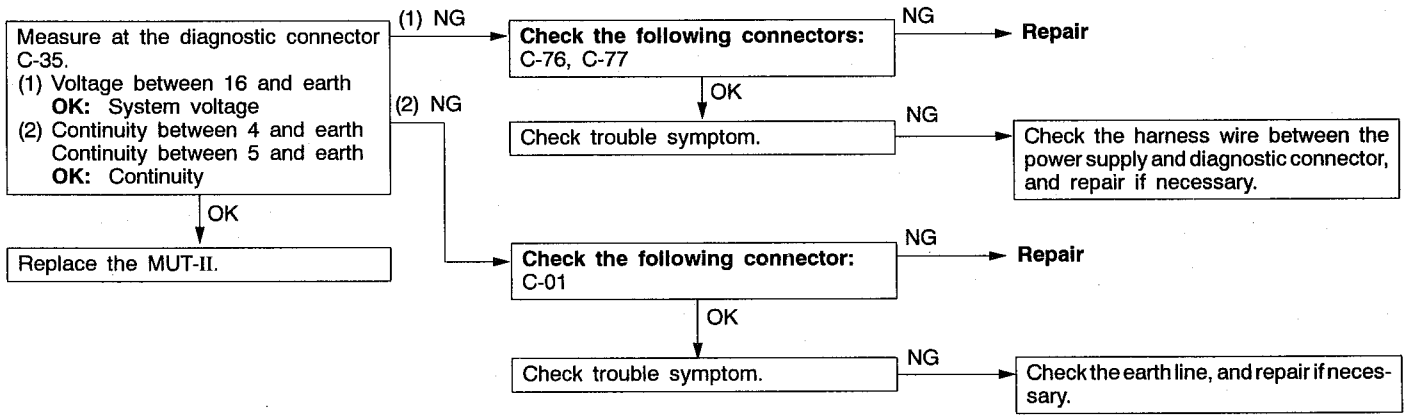

INSPECTION PROCEDURE 2

MUT-II communication with engine-ECU is impossible.	Probable cause
This may be caused by malfunction of engine-ECU power supply circuit and earth circuit.	• Malfunction of engine-ECU power supply circuit • Malfunction of engine-ECU • Open circuit between the engine-ECU and diagnosis connector

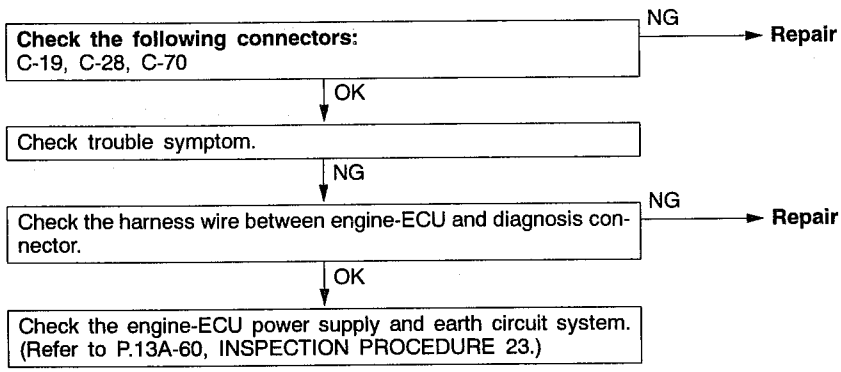

INSPECTION PROCEDURE 3

The engine warning lamp does not illuminate right after the ignition switch is turned to the ON position.	Probable cause
Because there is a burnt-out bulb, the engine-ECU causes the engine warning lamp to illuminate for five seconds immediately after the ignition switch is turned to ON. If the engine warning lamp does not illuminate immediately after the ignition switch is turned to ON, one of the malfunctions listed at right has probably occurred.	• Burnt-out bulb • Defective warning lamp circuit • Malfunction of the engine-ECU

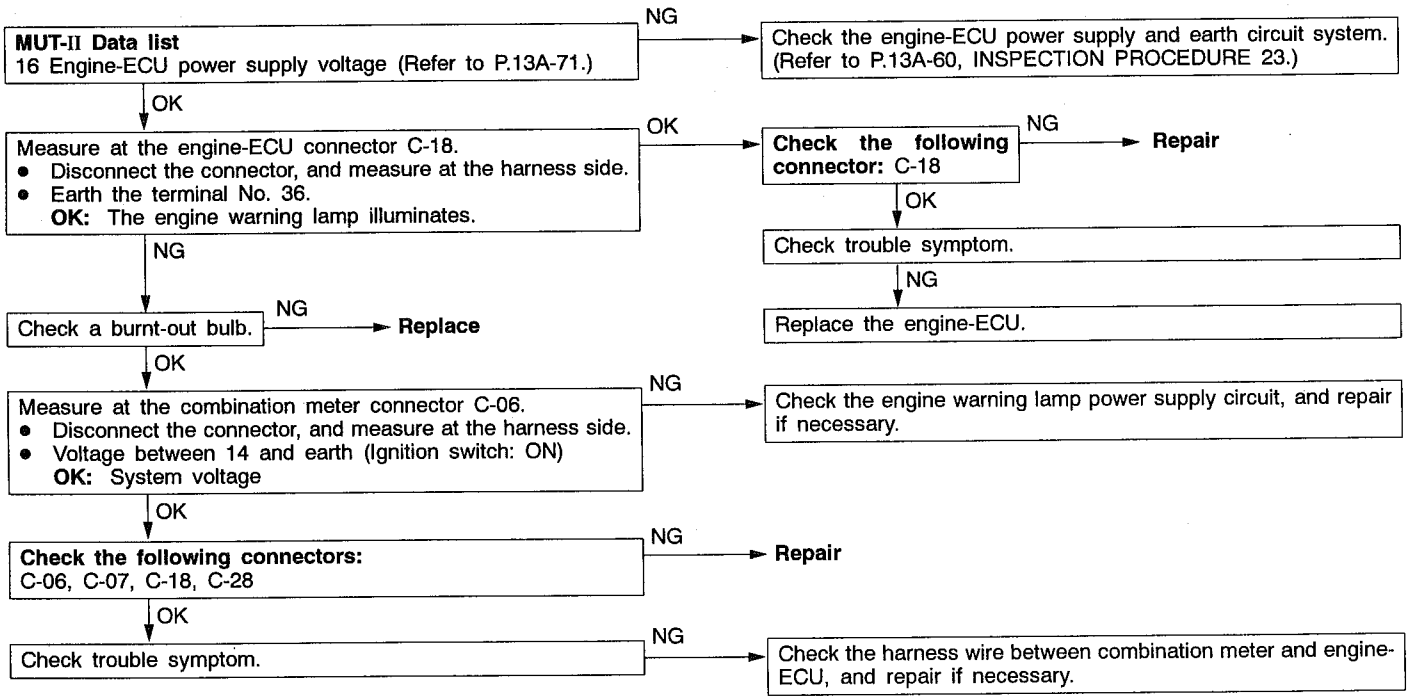

INSPECTION PROCEDURE 4

The engine warning lamp remains illuminating and never goes out.	Probable cause
In cases such as the above, the cause is probably that the engine-ECU is detecting a problem in a sensor or actuator, or that one of the malfunctions listed at right has occurred.	• Short-circuit between the engine warning lamp and engine-ECU • Malfunction of the engine-ECU

MUT-II Self-Diag code
Are diagnosis codes displayed?
Yes → Refer to P.13A-14, INSPECTION CHART FOR DIAGNOSIS CODES
No ↓

Measure at the combination meter connector C-07.
- Disconnect the connector, and measure at the harness side.
- Disconnect the engine-ECU connector
- Continuity between 47 and earth
  OK: No continuity

NG → Check the harness wire between combination meter and engine-ECU connector, and repair if necessary.
OK ↓

Replace the engine-ECU.

INSPECTION PROCEDURE 5

No initial combustion (starting impossible)	Probable cause
This is caused by incorrect fuel supply into the combustion chamber, and improper ignition circuit. Besides that, foreign material may be contaminated in fuel.	• Malfunction of the fuel supply system • Malfunction of the ignition system • Malfunction of the engine-ECU

Check system voltage while the engine is cranking.
OK: 8 V or more
NG → Check the battery. (Refer to GROUP 55 – Battery.)
OK ↓

MUT-II Self-Diag code
Is a diagnosis code displayed?
Yes → Refer to P.13A-14, INSPECTION CHART FOR DIAGNOSIS CODES.
No ↓

MUT-II Data list
16 System voltage (Refer to P.13A-71.)
NG → Check the engine control relay and ignition switch-IG system. (Refer to P.13A-60, INSPECTION PROCEDURE 24.)
OK ↓

Does the camshaft rotate when the engine is cranking?
No → Check if the timing belt is broken or damaged.
Yes ↓

MUT-II Actuator test
07 Fuel pump (low pressure) (Refer to P.13A-75.)
NG → Check the fuel pump (low pressure) system. (Refer to P.13A-64, INSPECTION PROCEDURE 28.)
OK ↓

MUT-II Data list
22 Crank angle sensor (Refer to P.13A-71.)
NG → Check the crank angle sensor system. (Refer to P.13A-19, INSPECTION PROCEDURE FOR DIAGNOSIS CODE 22.)
OK ↓

MUT-II Data list
21 Engine coolant temperature sensor (Refer to P.13A-71.)
NG → Check the engine coolant temperature sensor system. (Refer to P.13A-18, INSPECTION PROCEDURE FOR DIAGNOSIS CODE 21.)
OK ↓

To the next page

From the previous page

↓ OK

MUT-II Data list
14 Throttle position sensor (2nd channel) (Refer to P.13A-71.)

NG → Check the throttle position sensor (2nd channel) system. (Refer to P.13A-17, INSPECTION PROCEDURE FOR DIAGNOSIS CODE 14.)

↓ OK

Inspect engine start ability by cranking the engine while the accelerator pedal is slightly depressed.

OK → Clean around the throttle valve. (Refer to P.13A-91.)

↓ NG

Check fuel leakage. (Refer to P.13A-98.)

NG → **Repair**

↓ OK

Measure low fuel pressure between the fuel pump (low pressure) and fuel pump (high pressure). (Refer to P.13A-94.)

NG → **Repair**

↓ OK

Measure at ignition coil connectors A-09, A-10, A-11, A-12.
- Connect the connector.
- Connect a timing light to the No.1 terminal of each connector in turn.

(Engine cranking)
OK: The timing light flashes.

NG → Check abnormal fuel combustion system. (Refer to P.13A-26, INSPECTION PROCEDURE FOR DIAGNOSIS CODE 44.)

↓ OK

Check ignition timing while the engine is cranking.
OK: Approx. 5° BTDC

NG → Check that the crank angle sensor and timing belt cover are properly installed.

↓ OK

Check ignition coil spark for each cylinder.
(1) Remove the ignition coil.
(2) Install a new spark plug to the removed ignition coil.
(3) Disconnect the injector intermediate connector.

Caution
Never touch the connector terminal as approx. 100 V is applied to the injector, or you are seriously injured.

(4) Earth the spark plug electrode securely.
(5) Check that the spark plug ignites when the engine is cranked.

NG → Replace the ignition coil.

↓ OK

Check all the following items:
- Spark plug
- Compression pressure
- Foreign material (such as water or kerosine) entered the fuel lines

↓ OK

Check trouble symptom.

NG → Replace the injector.

INSPECTION PROCEDURE 6

Initial combustion takes place, but does not complete (start impossible), too long time to start (poor start)	Probable cause
This may be caused by improper spark plug ignition (poor spark), improper mixture during engine cranking, improper fuel pressure.	• Malfunction of the fuel supply system • Malfunction of the fuel pressure sensor • Malfunction of the ignition system • Malfunction of the electronic-controlled throttle vale system • Malfunction of the engine-ECU

Check system voltage while the engine is cranking.
OK: 8 V or more
NG → Check the battery. (Refer to GROUP 55 – Battery.)
OK ↓

MUT-II Self-Diag code
Is a diagnosis code displayed?
Yes → Refer to P.13A-14, INSPECTION CHART FOR DIAGNOSIS CODES.
No ↓

MUT-II Actuator test
07 Fuel pump (low pressure) (Refer to P.13A-75.)
NG → Check the fuel pump (low pressure) system. (Refer to P.13A-64, INSPECTION PROCEDURE 28.)
OK ↓

MUT-II Data list
21 Engine coolant temperature sensor (Refer to P.13A-71.)
NG → Check the engine coolant temperature system. (Refer to P.13A-18, INSPECTION PROCEDURE FOR DIAGNOSIS CODE 21.)
OK ↓

MUT-II Data list
18 Cranking signal (Refer to P.13A-71.)
NG → Check the ignition switch-ST system <M/T>. (Refer to P.13A-61, INSPECTION PROCEDURE 25.)
Check the ignition switch-ST system and inhibitor switch<A/T>. (Refer to P.13A-62, INSPECTION PROCEDURE 26.)
OK ↓

MUT-II Data list
74 Fuel pressure sensor (Refer to P.13A-74.)
NG → Check an abnormal fuel pressure system. (Refer to P.13A-27, INSPECTION PROCEDURE FOR DIAGNOSIS CODE 56.)
NG ↓

Check fuel leakage. (Refer to P.13A-98.)
NG → **Repair**
OK ↓

Is the engine started normally when it is cranked with the accelerator pedal depressed slightly?
Yes → Clean around the throttle valve. (Refer to P.13A-91.)
No ↓

MUT-II Data list
14 Throttle position sensor (2nd channel) (Refer to P.13A-71.)
NG → Check the throttle position sensor (2nd channel) system. (Refer to P.13A-17, INSPECTION PROCEDURE FOR DIAGNOSIS CODE 14.)
OK ↓

Check ignition timing when the engine is cranked.
OK: approx. 5° BTDC
NG → Check that the crank angle sensor and timing belt cover are properly installed.
OK ↓

To the next page

From the previous page

↓ OK

Check ignition coil spark for each cylinder.
(1) Remove the ignition coil.
(2) Install a new spark plug to the removed ignition coil.
(3) Disconnect the injector intermediate connector.

Caution
Never touch the connector terminal as approx. 100 V is applied to the injector, or you are seriously injured.

(4) Earth the spark plug electrode securely.
(5) Check that the spark plug ignites when the engine is cranked.

NG → Replace the ignition coil.

↓ OK

Check all the following items:
- Spark plug
- Compression pressure
- Foreign material (such as water or kerosine) entered the fuel lines

↓ OK

Check trouble symptom.

NG → Replace the injector.

INSPECTION PROCEDURE 7

Unstable idling (rough idle, hunting)	Probable cause
This malfunction is probably caused by a faulty ignition system, improper air/fuel ratio, a faulty electronic-controlled throttle valve system, improper compression pressure, etc. As many causes can be suspected, diagnose from easier items.	• Malfunction of the ignition system • Malfunction of the air/fuel ratio control system • Malfunction of the electronic-control throttle valve system • Improper compression pressure • Air sucking into the air intake system

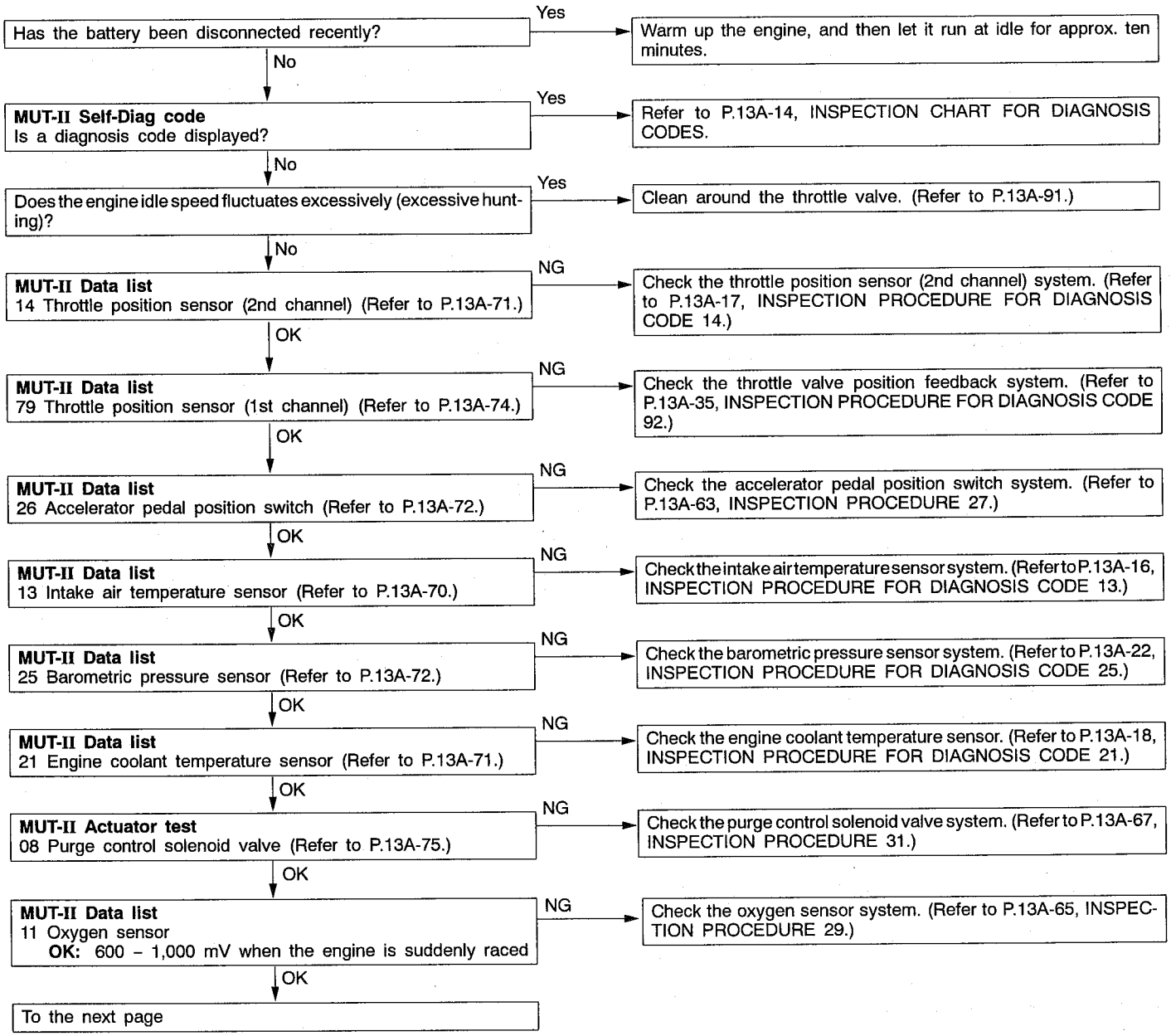

From the previous page

↓ OK

MUT-II Data list
11 Oxygen sensor
OK: 0 – 400 mV and 600 – 1,000 mV alternates when the engine is idling (wait for four minutes after the engine started).

NG → Measure fuel high-pressure between the fuel pump (high pressure) and injector. (Refer to P.13A-96.)

OK → Check that air is sucked in the air intake system.
- Broken intake manifold gasket
- Damaged vacuum hose
- Damaged air intake hose

NG → **Repair**

↓ OK

MUT-II Data list
27 Power steering fluid pressure switch (Refer to P.13A-72.)

NG → Check the power steering fluid pressure switch system. (Refer to P.13A-68, INSPECTION PROCEDURE 32.)

↓ OK

MUT-II Data list
28 A/C switch (Refer to P.13A-72.)

NG → Check the A/C switch and A/C relay system. (Refer to P.13A-68, INSPECTION PROCEDURE 33.)

↓ OK

MUT-II Data list
29 Inhibitor switch (Refer to P.13A-72.)

NG → Check the ignition switch-ST and inhibitor switch. <A/T> (Refer to P.13A-62, INSPECTION PROCEDURE 26.)

↓ OK

MUT-II Data list
67 Stop lamp switch (Refer to P.13A-73.)

NG → Check the stop lamp switch. (Refer to P.13A-69, INSPECTION PROCEDURE 34.)

↓ OK

MUT-II Data list
31 Small lamp switch (Refer to P.13A-72.)

NG → Check the small lamp switch system. (Refer to P.13A-69, INSPECTION PROCEDURE 35.)

↓ OK

MUT-II Data list
68 EGR valve (Refer to P.13A-73.)

NG → Check the EGR valve. (Refer to P.13A-66, INSPECTION PROCEDURE 30.)

↓ OK

Check ignition timing. (Refer to GROUP 11A – Engine Adjustment.)

NG → Check that the crank angle sensor and timing belt cover are properly installed.

↓ OK

Check ignition coil spark for each cylinder.
(1) Remove the ignition coil.
(2) Install a new spark plug to the removed ignition coil.
(3) Disconnect the injector intermediate connector.

Caution
Never touch the connector terminal as approx. 100 V is applied to the injector, or you are seriously injured.

(4) Earth the spark plug electrode securely.
(5) Check that the spark plug ignites when the engine is cranked.

NG → Replace the ignition coil.

↓ OK

Clean around the throttle valve. (Refer to P.13A-91.)

↓

Check trouble symptom.

↓ NG

Check all the following items in that order.
(1) Spark plugs
(2) Exhaust gas emission control system
(3) EGR system
(4) Compression pressure
(5) Foreign material (such as water or kerosine)entered the fuel line.
(6) Air is sucked in the air intake system, or EGR gas leaks.
- Damaged intake manifold gasket
- Damaged air intake hose
- Damaged vacuum hose
- Faulty EGR valve seat

INSPECTION PROCEDURE 8

Idle speed is high or low (Improper idling)	Probable cause
The cause is probably that the intake air amount during idling is too great or too small.	• Malfunction of the electronic-controlled throttle valve system • Malfunction of the throttle body

MUT-II Self-Diag code
Is a diagnosis code displayed?
- Yes → Refer to P.13A-14, INSPECTION CHART FOR DIAGNOSIS CODES.
- No ↓

MUT-II Data list
14 Throttle position sensor (2nd channel) (Refer to P.13A-71.)
- NG → Check the throttle position sensor (2nd channel). (Refer to P.13A-17, INSPECTION PROCEDURE FOR DIAGNOSIS CODE 14.)
- OK ↓

MUT-II Actuator test
08 Purge control solenoid valve (Refer to P.13A-75.)
- NG → Check the purge control solenoid valve. (Refer to P.13A-67, INSPECTION PROCEDURE 31.)
- OK ↓

MUT-II Data list
26 Accelerator pedal position switch (Refer to P.13A-72.)
- NG → Check the accelerator pedal position switch system. (Refer to P.13A-63, INSPECTION PROCEDURE 27.)
- OK ↓

MUT-II Data list
21 Engine coolant temperature sensor (Refer to P.13A-71.)
- NG → Check the engine coolant temperature sensor. (Refer to P.13A-18, INSPECTION PROCEDURE FOR DIAGNOSIS CODE 21.)
- OK ↓

MUT-II Data list
28 A/C switch (Refer to P.13A-72.)
- NG → Check the A/C switch and A/C relay system. (Refer to P.13A-68, INSPECTION PROCEDURE 33.)
- OK ↓

MUT-II Data list
29 Inhibitor switch (Refer to P.13A-72.)
- NG → Check the ignition switch-ST and inhibitor switch <A/T>. (Refer to P.13A-62, INSPECTION PROCEDURE 26.)
- OK ↓

MUT-II Data list
67 Stop lamp switch (Refer to P.13A-73.)
- NG → Check the stop lamp switch system. (Refer to P.13A-69, INSPECTION PROCEDURE 34.)
- OK ↓

- Clean around the throttle valve. (Refer to P.13A-91.)
- Adjust the throttle position sensor. (Refer to P.13A-91.)

INSPECTION PROCEDURE 9

When the engine is cold, it stalls at idling. (Die out)	Probable cause
The cause is probably an incorrect air/fuel ratio or poor intake air amount when the engine is cold.	• Malfunction of the electronic-control throttle valve system • Malfunction of the throttle body

Have the battery terminals been disconnected recently?
- Yes → Warm up the engine, and then let it run at idle for approx. ten minutes.
- No ↓

MUT-II Self-Diag code
Is a diagnosis code displayed?
- Yes → Refer to P.13A-14, INSPECTION CHART FOR DIAGNOSIS CODES.
- No ↓

Is the engine idling correct after the engine has been warmed up?
- Yes → Refer to "Unstable idling (rough idle, hunting)." (Refer to P.13A-45, INSPECTION PROCEDURE 7.)
- No ↓

MUT-II Data list
22 Crank angle sensor (Refer to P.13A-71.)
Check idling speed when the engine is cold.
- NG → Check the throttle valve position feedback system. (Refer to P.13A-35, INSPECTION PROCEDURE FOR DIAGNOSIS CODE 92.)
- OK ↓

MUT-II Data list
26 Accelerator pedal position switch (Refer to P.13A-72.)
- NG → Check the accelerator position switch. (Refer to P.13A-63, INSPECTION PROCEDURE 27.)
- OK ↓

MUT-II Data list
21 Engine coolant temperature sensor (Refer to P.13A-71.)
- NG → Check the engine coolant temperature sensor. (Refer to P.13A-18, INSPECTION PROCEDURE FOR DIAGNOSIS CODE 21.)
- OK ↓

MUT-II Data list
68 EGR valve (Refer to P.13A-73.)
- NG → Check the EGR valve system. (Refer to P.13A-66, INSPECTION PROCEDURE 30.)
- OK ↓

Does the engine stall immediately after the accelerator pedal is released?
- Yes → Clean around the throttle valve. (Refer to P.13A-91.)
- No ↓

Measure fuel high pressure between the fuel pump (high pressure) and injector. (Refer to P.13A-96.)
- NG → **Repair**
- OK ↓

Check ignition timing. (Refer to GROUP 11A – Engine Adjustment.)
- NG → Check that the crank angle sensor and timing belt cover are properly installed.
- OK ↓

Check ignition coil spark for each cylinder.
(1) Remove the ignition coil.
(2) Install a new spark plug to the removed ignition coil.
(3) Disconnect the injector intermediate connector.

Caution
Never touch the connector terminal as approx. 100 V is applied to the injector, or you are seriously injured.

(4) Earth the spark plug electrode securely.
(5) Check that the spark plug ignites when the engine is cranked.
- NG → Replace the ignition coil.
- OK ↓

Check all the following items:
- Spark plugs
- Compression pressure
- Engine oil viscosity

- OK → Check trouble symptom.
  - NG → Replace the injector.

INSPECTION PROCEDURE 10

When the engine is hot, it stalls at idling. (Die out)	Probable cause
The cause is probably an improper air/fuel ratio, faulty electronic-controlled throttle valve system, compression pressure. In addition, if the engine stalls suddenly, another possible cause might be a poor connector contact.	• Malfunction of the ignition system • Malfunction of air/fuel ratio control system • Malfunction of electronic-controlled throttle valve system • Malfunction of the throttle body • Poor connector contact • Improper compression pressure • Air stuck in the air intake system

Have the battery terminals been disconnected recently?
- Yes → Warm up the engine, and then let it run at idle for approx. ten minutes.
- No ↓

MUT-II Self-Diag code
Is a diagnosis code displayed?
- Yes → Refer to P.13A-14, INSPECTION CHART FOR DIAGNOSIS CODES.
- No ↓

MUT-II Data list
79 Throttle position sensor (1st channel) (Refer to P.13A-74.)
- NG → Check the throttle position sensor (1st channel) system. (Refer to P.13A-33, INSPECTION PROCEDURE FOR DIAGNOSIS CODE 79.)
- OK ↓

Is it easy to reproduce the engine stall?
- No → While carrying out an intermittent malfunction simulation test. (Refer to GROUP 00 – Points to Note for Intermittent Malfunction.), check for sudden changes in the following signals.
  - Crank angle sensor signal
  - Injector drive signal
  - Fuel pump (low pressure) drive signal
  - Air flow sensor
  - Primary ignition signal
  - Power supply to the engine-ECU
- Yes ↓

MUT-II Data list
26 Accelerator pedal position switch (Refer to P.13A-72.)
- NG → Check the accelerator pedal position switch. (Refer to P.13A-63, INSPECTION PROCEDURE 27.)
- OK ↓

MUT-II Data list
13 Intake air temperature sensor (Refer to P.13A-70.)
- NG → Check the intake air temperature sensor. (Refer to P.13A-16, INSPECTION PROCEDURE FOR DIAGNOSIS CODE 13.)
- OK ↓

MUT-II Data list
25 Barometric pressure sensor (Refer to P.13A-72.)
- NG → Check the barometric pressure sensor. (Refer to P.13A-22, INSPECTION PROCEDURE FOR DIAGNOSIS CODE 25.)
- OK ↓

MUT-II Data list
21 Engine coolant temperature sensor (Refer to P.13A-71.)
- NG → Check the engine coolant temperature sensor. (Refer to P.13A-18, INSPECTION PROCEDURE FOR DIAGNOSIS CODE 21.)
- OK ↓

MUT-II Data list
11 Oxygen sensor
OK: 600 – 1,000 mV when the engine is suddenly raced
- NG → Check the oxygen sensor system. (Refer to P.13A-65, INSPECTION PROCEDURE 29.)
- OK ↓

MUT-II Data list
11 Oxygen sensor
OK: 0 – 400 mV and 600 – 1,000 mV alternates when the engine is idling (wait for four minutes after the engine started).
- NG → Measure fuel high-pressure between the fuel pump (high pressure) and injector. (Refer to P.13A-96.)
  - OK → Check that air is sucked in the air intake system.
    - Broken intake manifold gasket
    - Damaged vacuum hose
    - Damaged air intake hose
  - NG → **Repair**
- OK ↓

To the next page

From the previous page

OK

MUT-II Data list
27 Power steering fluid pressure switch (Refer to P.13A-72.)

NG → Check the power steering fluid pressure switch system. (Refer to P.13A-68, INSPECTION PROCEDURE 32.)

OK

MUT-II Data list
28 A/C switch (Refer to P.13A-72.)

NG → Check the A/C switch and A/C relay system. (Refer to P.13A-68, INSPECTION PROCEDURE 33.)

OK

MUT-II Data list
29 Inhibitor switch (Refer to P.13A-72.)

NG → Check the ignition switch-ST and inhibitor switch <A/T>. (Refer to P.13A-62, INSPECTION PROCEDURE 26.)

OK

MUT-II Data list
31 Small lamp switch (Refer to P.13A-72.)

NG → Check the small lamp switch system. (Refer to P.13A-69, INSPECTION PROCEDURE 35.)

OK

MUT-II Data list
34 Air flow sensor reset signal (Refer to P.13A-72.)

NG → Check the air flow sensor system. (Refer to P.13A-15, INSPECTION PROCEDURE FOR DIAGNOSIS CODE 12.)

OK

MUT-II Data list
68 EGR valve (Refer to P.13A-73.)

NG → Check the EGR valve. (Refer to P.13A-66, INSPECTION PROCEDURE 30.)

OK

Does the engine stall immediately after the accelerator pedal is released?

Yes → Clean around the throttle valve. (Refer to P.13A-91.)

No

Check ignition timing. (Refer to GROUP 11A – Engine Adjustment.)

NG → Check that the crank angle sensor and timing belt cover are properly installed.

OK

Check ignition coil spark for each cylinder.
(1) Remove the ignition coil.
(2) Install a new spark plug to the removed ignition coil.
(3) Disconnect the injector intermediate connector.

Caution
Never touch the connector terminal as approx. 100 V is applied to the injector, or you are seriously injured.

(4) Earth the spark plug electrode securely.
(5) Check that the spark plug ignites when the engine is cranked.

NG → Replace the ignition coil.

OK

Check all the following items:
- Spark plugs
- Compression pressure
- Foreign material (such as water or kerosine) entered the fuel lines

INSPECTION PROCEDURE 11

The engine stalls when starting the car. (Pass out)	Probable cause
The cause is probably poor ignition due to a malfunctioning spark plug (weak spark), or an incorrect air/fuel ratio when the accelerator is depressed.	• Malfunction of the ignition system • Malfunction of the EGR valve • Air stuck in the air intake system

MUT-II Self-Diag code
Is a diagnosis code displayed?
→ Yes → Refer to P.13A-14, INSPECTION CHART FOR DIAGNOSIS CODES.
↓ No

MUT-II Data list
68 EGR valve (Refer to P.13A-73.)
→ NG → Check the EGR valve. (Refer to P.13A-66, INSPECTION PROCEDURE 30.)
↓ OK

MUT-II Actuator test
08 Purge control solenoid valve (Refer to P.13A-75.)
→ NG → Check the purge control solenoid valve system. (Refer to P.13A-67, INSPECTION PROCEDURE 31.)
↓ OK

Check ignition coil spark for each cylinder.
(1) Remove the ignition coil.
(2) Install a new spark plug to the removed ignition coil.
(3) Disconnect the injector intermediate connector.

Caution
Never touch the connector terminal as approx. 100 V is applied to the injector, or you are seriously injured.

(4) Earth the spark plug electrode securely.
(5) Check that the spark plug ignites when the engine is cranked.

→ NG → Replace the ignition coil.
↓ OK

Check all the following items:
(1) Spark plug
(2) Check if air is stuck in the air intake system.
- Damage intake manifold gasket
- Damaged or disconnected vacuum hose
- Damaged air intake hose

INSPECTION PROCEDURE 12

The engine stalls when decelerating.	Probable cause
The cause is probably an improper air/fuel ratio due to a faulty EGR system, or poor intake air volume due to a faulty electronic-controlled throttle valve system.	• Malfunction of the electronic-controlled throttle valve system • Malfunction of the EGR valve

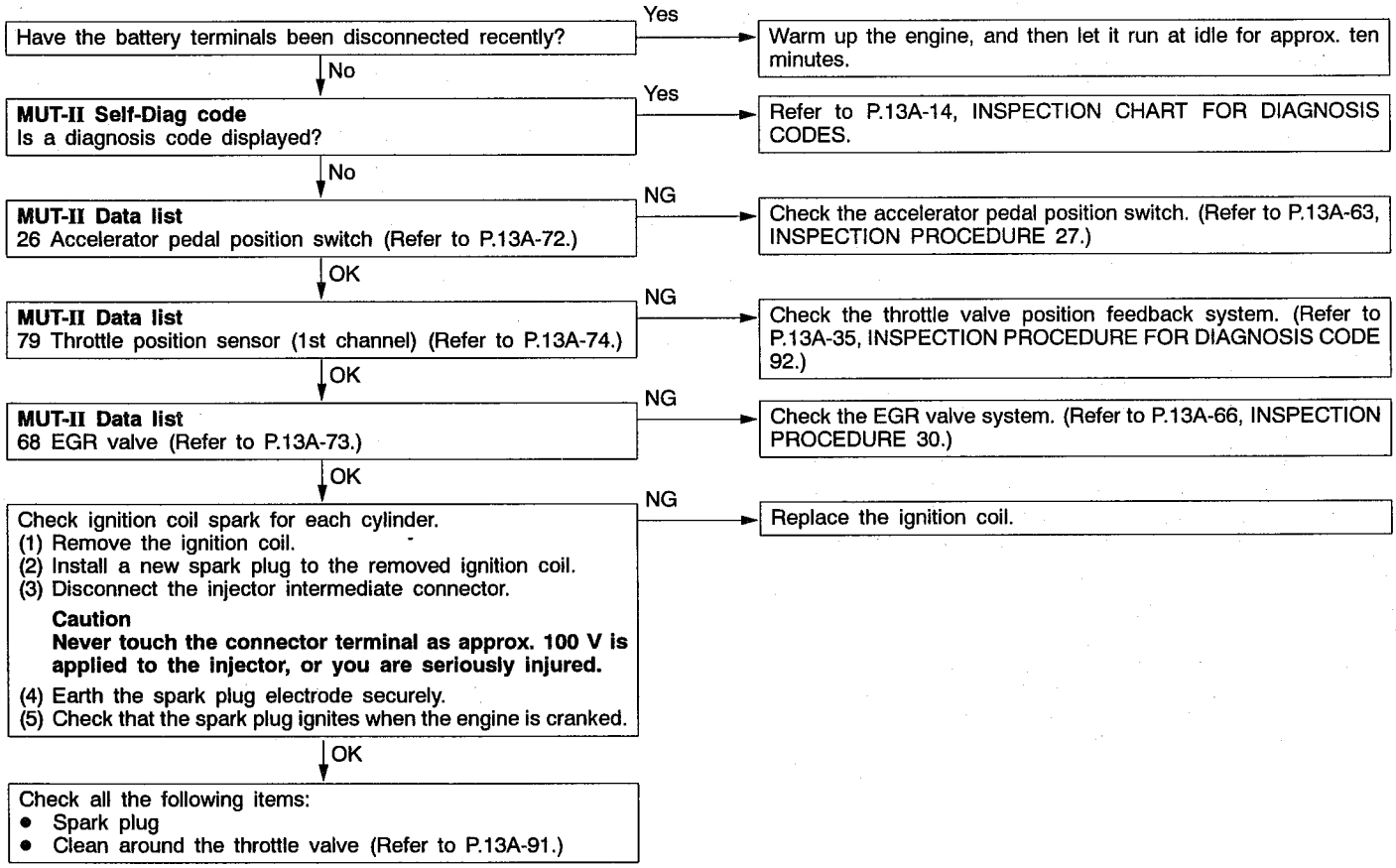

INSPECTION PROCEDURE 13

Hesitation, sag, stumble, poor acceleration or surge	Probable cause
The cause is probably a malfunction of the ignition system, electronic-controlled throttle valve system, compression pressure, etc.	• Malfunction of the ignition system • Malfunction of the air/fuel ratio control system • Malfunction of the electronic-controlled throttle valve system • Improper compression pressure • Air stuck in the air intake system

MUT-II Self-Diag code
Is a diagnosis code displayed?
- Yes → Refer to P.13A-14, INSPECTION CHART FOR DIAGNOSIS CODES.
- NO ↓

Check ignition timing. (Refer to GROUP 11A – Engine Adjustment.)
- NG → Check that the crank angle sensor and timing belt cover are properly installed.
- OK ↓

MUT-II Data list
26 Accelerator pedal position switch (Refer to P.13A-72.)
- NG → Check the accelerator pedal position switch. (Refer to P.13A-63, INSPECTION PROCEDURE 27.)
- OK ↓

MUT-II Data list
13 Intake air temperature sensor (Refer to P.13A-70.)
- NG → Check the intake air temperature sensor. (Refer to P.13A-16, INSPECTION PROCEDURE FOR DIAGNOSIS CODE 13.)
- OK ↓

MUT-II Data list
25 Barometric pressure sensor (Refer to P.13A-72.)
- NG → Check the barometric pressure sensor. (Refer to P.13A-22, INSPECTION PROCEDURE FOR DIAGNOSIS CODE 25.)
- OK ↓

MUT-II Data list
21 Engine coolant temperature sensor (Refer to P.13A-71.)
- NG → Check the engine coolant temperature sensor. (Refer to P.13A-18, INSPECTION PROCEDURE FOR DIAGNOSIS CODE 21.)
- OK ↓

MUT-II Data list
79 Throttle position sensor (1st channel) (Refer to P.13A-74.)
- NG → Check the throttle valve position feedback system. (Refer to P.13A-36, INSPECTION PROCEDURE FOR DIAGNOSIS CODE 99.)
- OK ↓

MUT-II Data list
11 Oxygen sensor
OK: 600 – 1,000 mV when the engine is suddenly raced
- NG → Check the oxygen sensor system. (Refer to P.13A-65, INSPECTION PROCEDURE 29.)
- OK ↓

MUT-II Data list
11 Oxygen sensor
OK: 0 – 400 mV and 600 – 1,000 mV alternates when the engine is idling (wait for four minutes after the engine started).
- NG → Measure fuel high-pressure between the fuel pump (high pressure) and injector. (Refer to P.13A-96.)
  - OK ↓ Check that air is sucked in the air intake system.
    - Broken intake manifold gasket
    - Damaged vacuum hose
    - Damaged air intake hose
- OK ↓

MUT-II Data list
68 EGR valve (Refer to P.13A-73.)
- NG → Check the EGR valve. (Refer to P.13A-66, INSPECTION PROCEDURE 30.)
- OK ↓

MUT-II Actuator test
08 Purge control solenoid valve (Refer to P.13A-75.)
- NG → Check the purge control solenoid valve. (Refer to P.13A-67, INSPECTION PROCEDURE 31.)
- OK ↓

To the next page

From the previous page

↓ OK

Measure high fuel pressure between the fuel pump (high pressure) and injector. (Refer to P.13A-96.) — NG → **Repair**

↓ OK

Check ignition coil spark for each cylinder. — NG → Replace the ignition coil.
(1) Remove the ignition coil.
(2) Install a new spark plug to the removed ignition coil.
(3) Disconnect the injector intermediate connector.

Caution
Never touch the connector terminal as approx. 100 V is applied to the injector, or you are seriously injured.

(4) Earth the spark plug electrode securely.
(5) Check that the spark plug ignites when the engine is cranked.

↓ OK

Check all the following items: — OK → Check trouble symptom. — NG → Replace the injector.
- Spark plug
- EGR system
- Compression pressure
- Clogged fuel filter, fuel line

INSPECTION PROCEDURE 14

The feeling of impact when accelerating	Probable cause
The cause is probably an ignition leak being generated in line with an increase in the spark plug request voltage during acceleration.	• Malfunction of the ignition system

MUT-II Self-Diag code
Is a diagnosis code displayed? — Yes → (Refer to P.13A-14, INSPECTION CHART FOR DIAGNOSIS CODES.)

↓ No

MUT-II Data list
79 Throttle position sensor (1st channel) (Refer to P.13A-74.) — NG → Check the throttle valve position feedback system. (Refer to P.13A-35, INSPECTION PROCEDURE FOR DIAGNOSIS CODE 92.)

↓ OK

Check ignition coil spark for each cylinder. — OK → Check all the following items:
(1) Remove the ignition coil.
(2) Install a new spark plug to the removed ignition coil.
(3) Disconnect the injector intermediate connector.

Caution
Never touch the connector terminal as approx. 100 V is applied to the injector, or you are seriously injured.

(4) Earth the spark plug electrode securely.
(5) Check that the spark plug ignites when the engine is cranked.

- Spark plug
- Ignition current leak

NG → Replace the ignition coil.

INSPECTION PROCEDURE 15

The feeling of impact when decelerating	Probable cause
The cause is probably insufficient intake air due to a faulty electronic-controlled throttle valve system.	• Malfunction of the electronic-controlled throttle valve system

MUT-II Self-Diag code
Is a diagnosis code displayed?
Yes → Refer to P.13A-14, INSPECTION CHART FOR DIAGNOSIS CODES.
No ↓

MUT-II Data list
79 Throttle position sensor (1st channel) (Refer to P.13A-74.)
NG → Check the throttle valve position feedback system. (Refer to P.13A-35, INSPECTION PROCEDURE FOR DIAGNOSIS CODE 92.)
OK ↓

MUT-II Data list
26 Accelerator pedal position switch (Refer to P.13A-72.)
NG → Check the accelerator pedal position switch system. (Refer to P.13A-63, INSPECTION PROCEDURE 27.)
OK ↓

Clean around the throttle valve. (Refer to P.13A-91.)

INSPECTION PROCEDURE 16

Knocking	Probable cause
The cause is probably incorrect detonation control or improper heat range of the spark plugs.	• Malfunction of the detonation sensor • Improper heat range of the spark plugs

MUT-II Self-Diag code
Is a diagnosis code displayed?
Yes → Refer to P.13A-14, INSPECTION CHART FOR DIAGNOSIS CODES.
No ↓

Does knocking occur when the vehicle is driven with the detonation sensor disconnected?
(At this time, use the MUT-II to check whether the ignition timing is retarded from when the detonation sensor connector is connected.)
No → Check the detonation sensor system. (Refer to P.13A-23, INSPECTION PROCEDURE FOR DIAGNOSIS CODE 31.)
Yes ↓

Check all the following items:
- Spark plug
- Foreign material (such as water or kerosine) entered the fuel lines

INSPECTION PROCEDURE 17

Run-on (dieseling)	Probable cause
The cause is probably fuel leak from injector(s)	• Malfunction of the injector

Replace the injector.

INSPECTION PROCEDURE 18

Too high CO and HC concentration when idling	Probable cause
The cause is probably an incorrect air/fuel ratio	• Malfunction of air/fuel ratio control system • Deterioration of the catalyst

MUT-II Self-Diag code
Is a diagnosis code displayed?
Yes → Refer to P.13A-14, INSPECTION CHART FOR DIAGNOSIS CODES.
No ↓

Check ignition timing. (Refer to GROUP 11A – Engine Adjustment.)
NG → Check that the crank angle sensor and timing belt cover are properly installed.
OK ↓

MUT-II Data list
21 Engine coolant temperature sensor (Refer to P.13A-71.)
NG → Check the engine coolant temperature sensor. (Refer to P.13A-18, INSPECTION PROCEDURE FOR DIAGNOSIS CODE 21.)
OK ↓

MUT-II Data list
13 Intake air temperature sensor (Refer to P.13A-70.)
NG → Check the intake air temperature sensor. (Refer to P.13A-16, INSPECTION PROCEDURE FOR DIAGNOSIS CODE 13.)
OK ↓

MUT-II Data list
25 Barometric pressure sensor (Refer to P.13A-72.)
NG → Check the barometric pressure sensor. (Refer to P.13A-22, INSPECTION PROCEDURE FOR DIAGNOSIS CODE 25.)
OK ↓

MUT-II Data list
11 Oxygen sensor
OK: 600 – 1,000 mV when the engine is suddenly raced
NG → Check the oxygen sensor system. (Refer to P.13A-65, INSPECTION PROCEDURE 29.)
OK ↓

MUT-II Data list
11 Oxygen sensor
OK: 0 – 400 mV and 600 – 1,000 mV alternates when the engine is idling (wait for four minutes after the engine started).
OK → Replace the oxygen sensor. → Check trouble symptom.
NG ↓

Measure fuel high-pressure between the fuel pump (high pressure) and injector. (Refer to P.13A-96.)
NG → **Repair**
OK ↓

Check ignition coil spark for each cylinder.
(1) Remove the ignition coil.
(2) Install a new spark plug to the removed ignition coil.
(3) Disconnect the injector intermediate connector.

Caution
Never touch the connector terminal as approx. 100 V is applied to the injector, or you are seriously injured.

(4) Earth the spark plug electrode securely.
(5) Check that the spark plug ignites when the engine is cranked.

OK ↓
NG → Replace the ignition coil.

Check all the following items:
- Spark plug
- EGR system
- Compression pressure
- Clogged fuel filter or line

OK ↓

To the next page

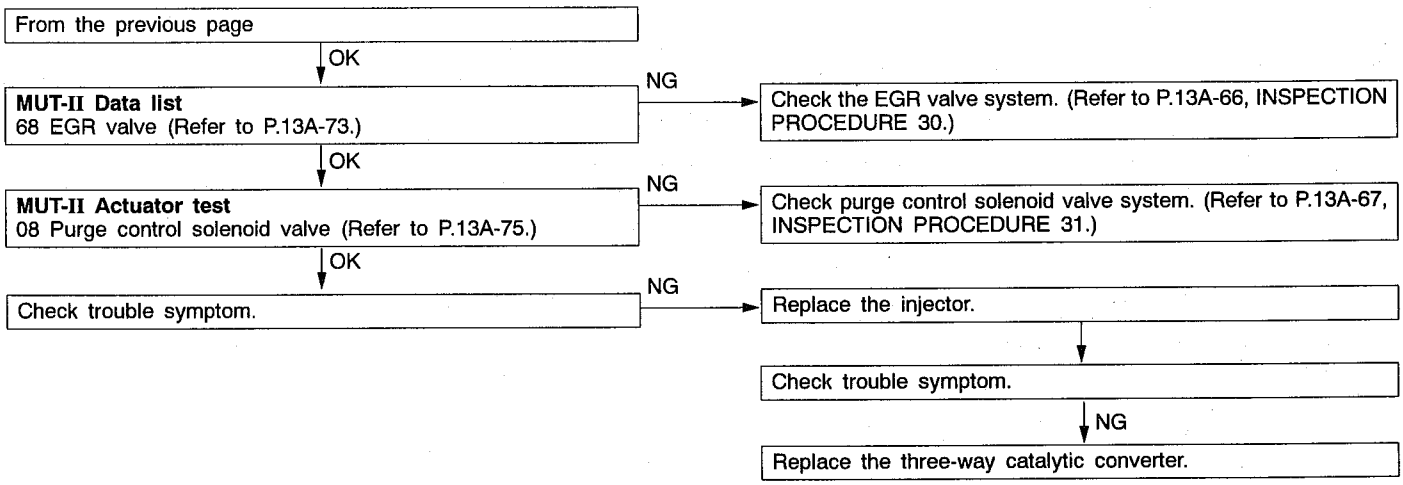

INSPECTION PROCEDURE 19

Low alternator output voltage (approx. 12.3 V)	Probable cause
The cause is probably a malfunction of the alternator or one of the problems listed at right.	• Malfunction of the charging system • Open circuit between the alternator G terminal and the engine-ECU • Malfunction of the engine-ECU

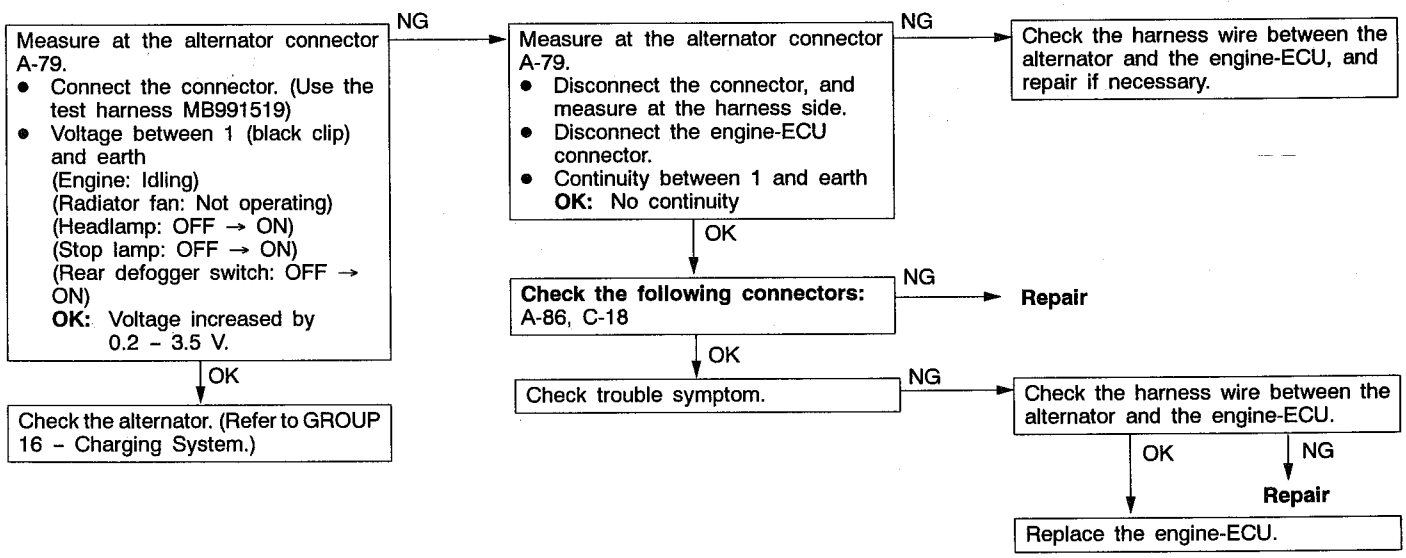

INSPECTION PROCEDURE 20

Fans (radiator fan, A/C condenser fan) are inoperative.	Probable cause
The engine-ECU sends a duty signal to the fan controller according to engine coolant temperature, vehicle speed, or A/C switch. The fan controller controls radiator fan and condenser fan speeds, based on this signal. (The closer the terminal voltage comes to 5 V, the higher the fan speed becomes.)	• Malfunction of the fan motor relay • Malfunction of the fan motor • Malfunction of the fan controller • Open or short circuit, or poor connector contact • Malfunction of the engine-ECU

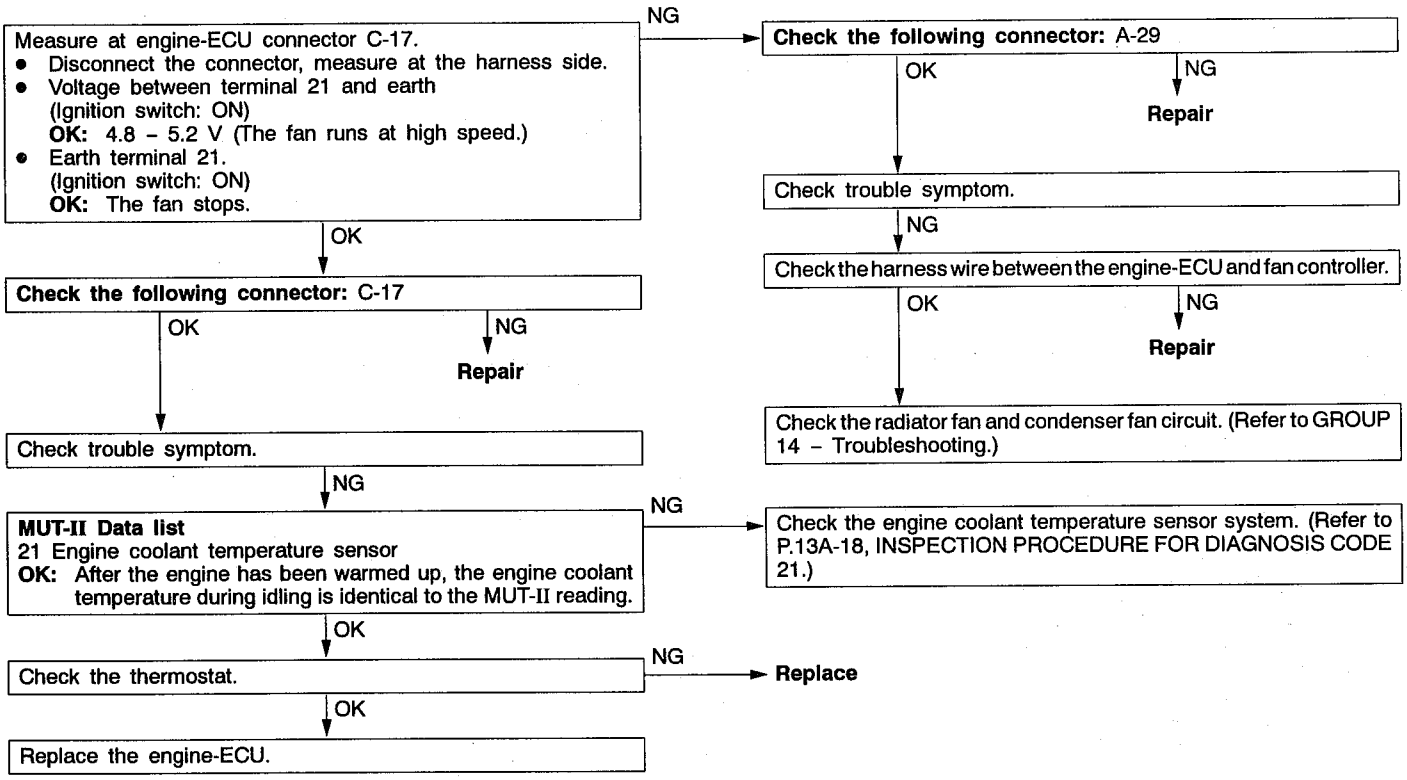

INSPECTION PROCEDURE 21

GDI ECO indicator lamp does not illuminate.	Probable cause
If the GDI ECO indicator lamp does not illuminate after turning on the ignition switch, the causes listed in the right column are suspected.	• Burned-out GDI ECO indicator lamp bulb • Open circuit or short-circuited harness wire in the GDI ECO indicator lamp circuit • Malfunction of the engine-ECU

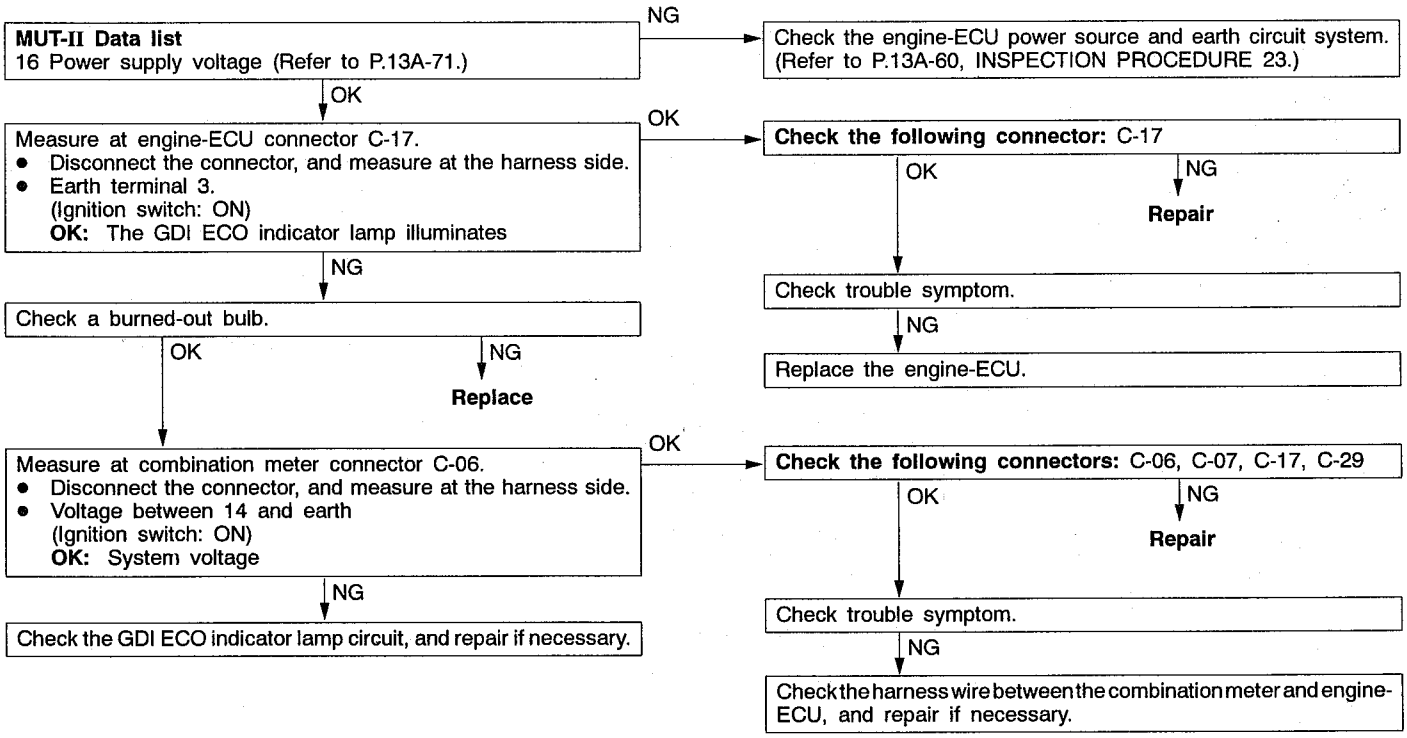

INSPECTION PROCEDURE 22

GDI ECO indicator lamp remains illuminated and does not go off.	Probable cause
If the GDI ECO indicator lamp does not go off during high load operation, the causes listed in the right column are suspected.	• Short circuit between the GDI ECO indicator lamp and engine-ECU • Malfunction of the engine-ECU

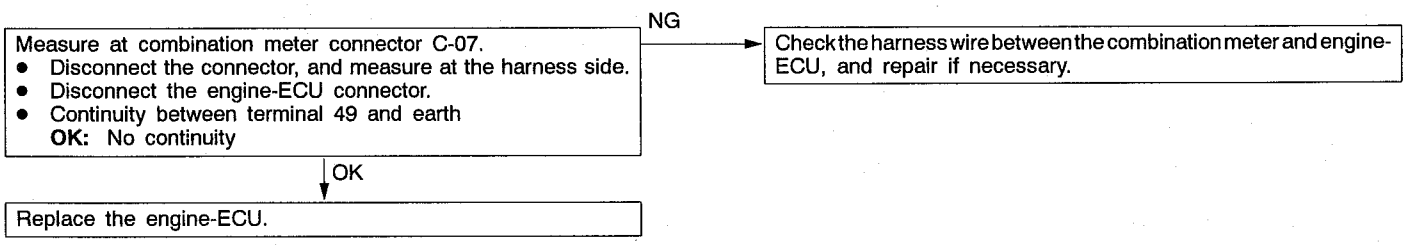

INSPECTION PROCEDURE 23

Engine-ECU power supply and earth circuit system	Probable cause
The cause is probably a malfunction of the engine-ECU or one of the problems listed at right.	• Open circuit or short-circuited harness wire in the engine-ECU power supply circuit • Open circuit or short-circuited harness wire in the engine-ECU earth circuit • Malfunction of the engine-ECU

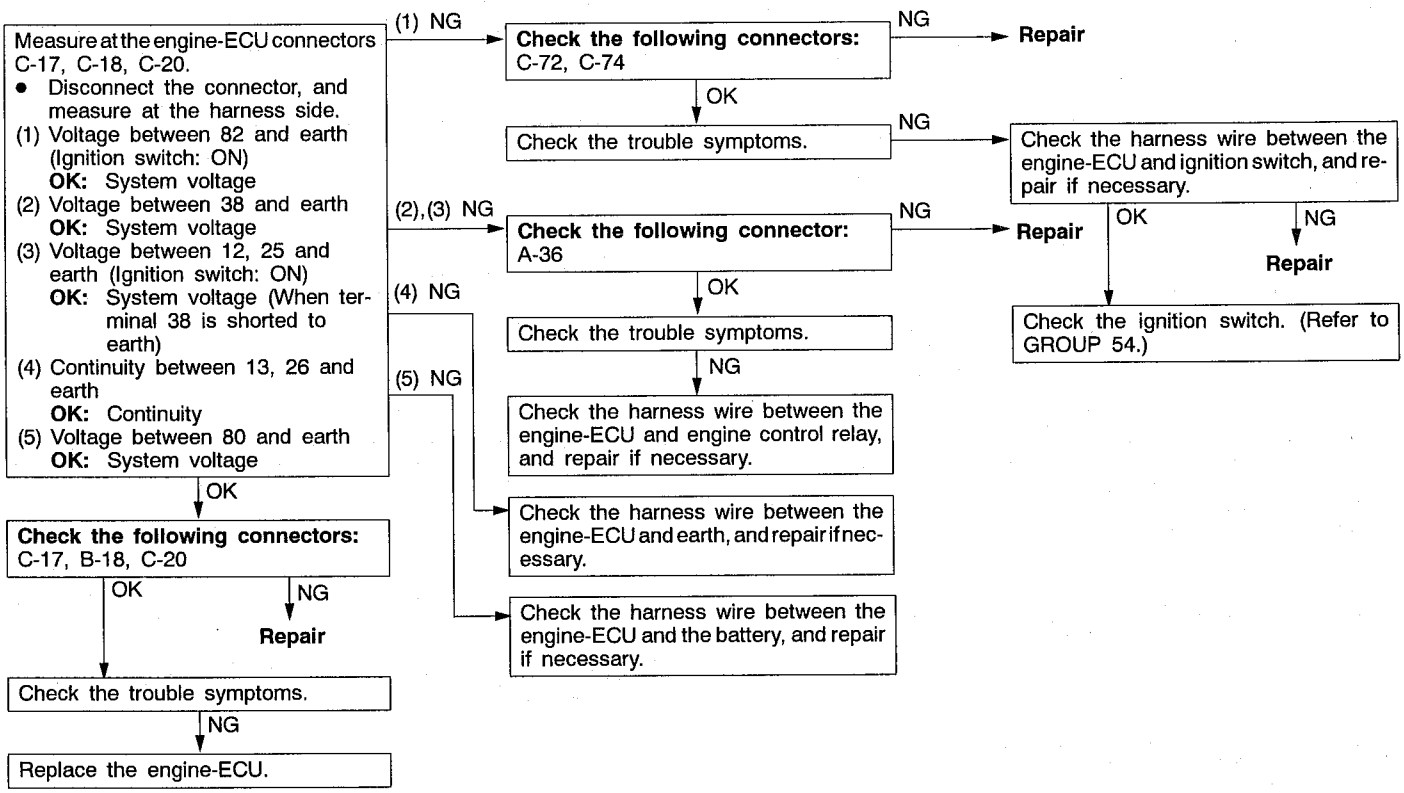

INSPECTION PROCEDURE 24

Engine control relay and ignition switch-IG system	Probable cause
When the ignition switch ON signal is input to the engine-ECU, the engine-ECU turns on the engine control relay. This causes system voltage to be supplied to the engine-ECU and to the sensors and actuators.	• Malfunction of the ignition switch • Malfunction of the engine control relay • Open circuit or short-circuited harness wire of the engine control relay circuit • Malfunction of the engine-ECU

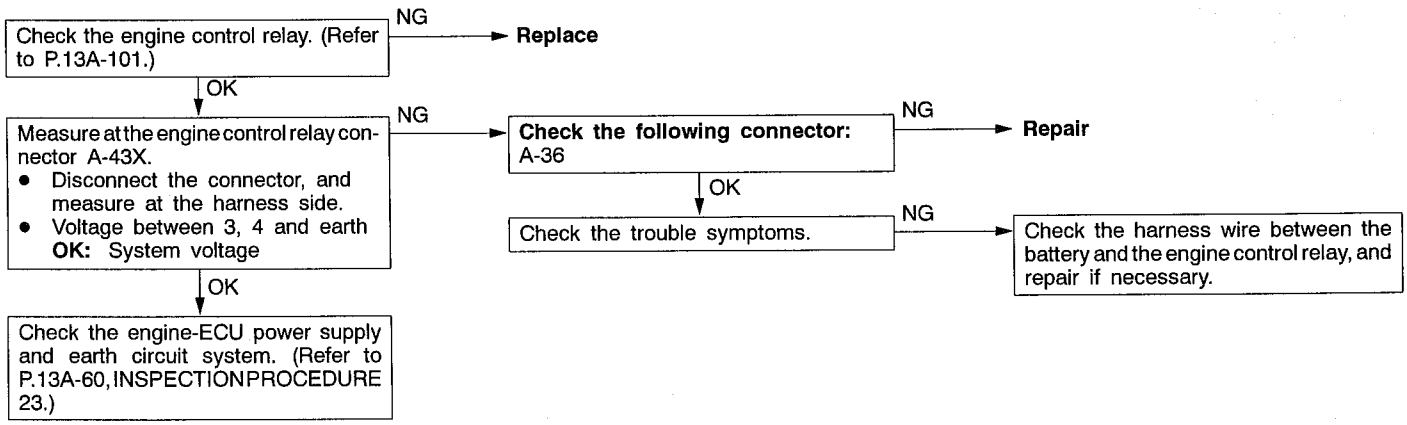

INSPECTION PROCEDURE 25

Ignition switch-ST system <M/T>	Probable cause
The ignition switch-ST outputs a HIGH signal to the engine-ECU while the engine is cranking, and the engine-ECU uses this signal to carry out functions such as fuel injection control during starting.	• Malfunction of the ignition switch • Open circuit or short-circuited harness wire between ignition switch • Malfunction of the engine-ECU

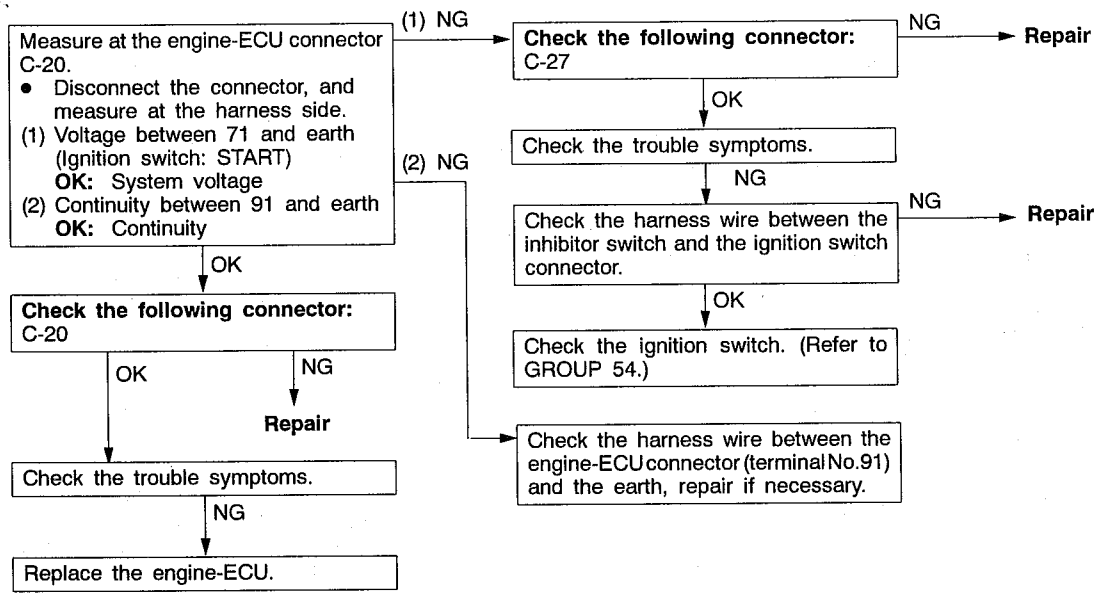

INSPECTION PROCEDURE 26

Ignition switch-ST and inhibitor switch system <A/T>	Probable cause
The ignition switch-ST outputs a HIGH signal to the engine-ECU while the engine is cranking, and the engine-ECU uses this signal to carry out functions such as fuel injection control during starting. The inhibitor switch inputs the position of the selector lever to the engine-ECU. The engine-ECU uses this signal to carry out idle speed control.	• Malfunction of the ignition switch • Malfunction of the inhibitor switch • Open circuit or short-circuited harness wire between ignition switch and inhibitor switch • Malfunction of the engine-ECU

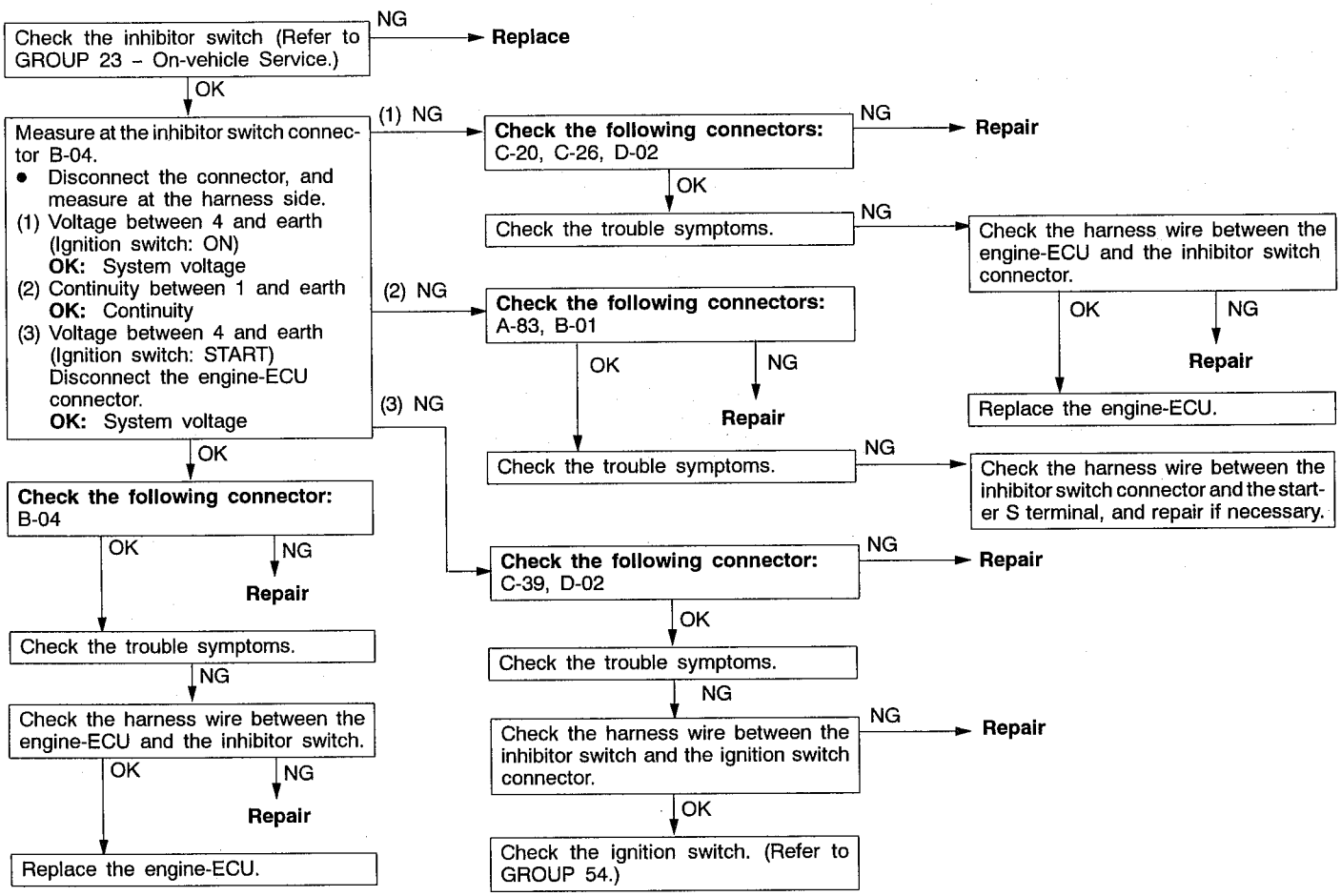

INSPECTION PROCEDURE 27

Accelerator pedal position switch system	Probable cause
The accelerator pedal position switch detects that the accelerator pedal is fully closed, and sends a signal to the engine-ECU. The engine-ECU controls idle speed, based on this signal.	• Maladjustment of the accelerator cable • Maladjustment of the accelerator pedal position switch • Open circuit or short-circuited harness wire in the accelerator pedal position switch system, or poor connector contact • Malfunction of the engine-ECU

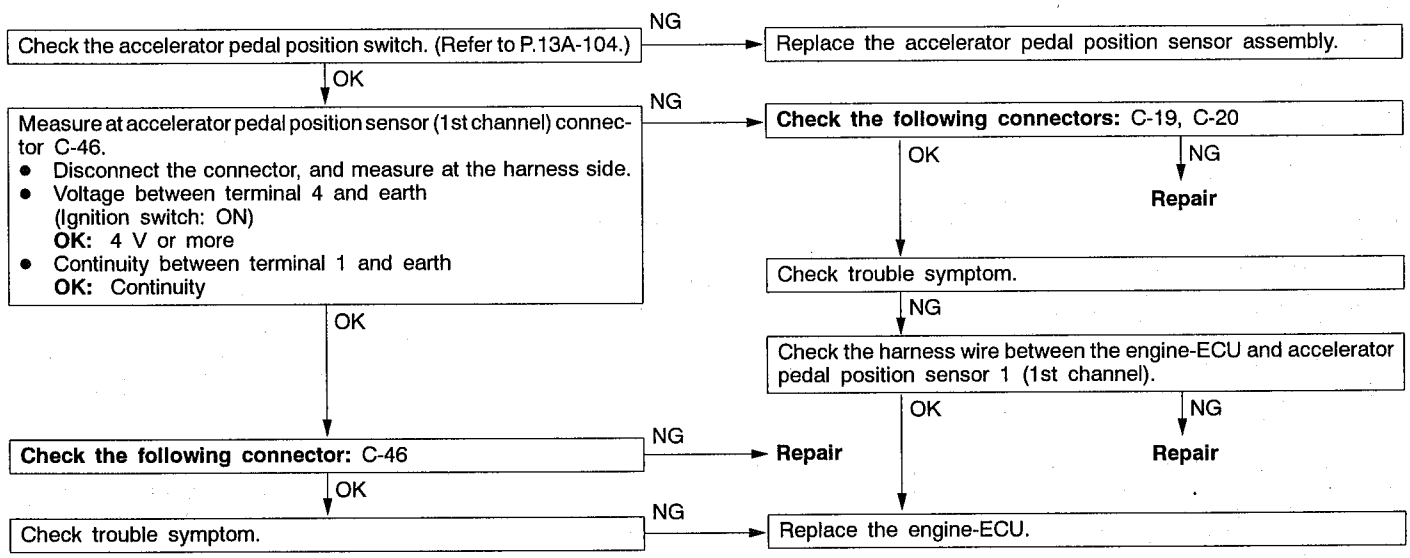

INSPECTION PROCEDURE 28

Fuel pump (low pressure) system	Probable cause
The engine-ECU turns on the fuel pump relay while the engine is cranking or running, and supplies power source to the fuel pump (low pressure).	• Malfunction of the fuel pump relay • Malfunction of the fuel pump (low pressure) • Open circuit or short-circuited harness wire in the fuel pump (low pressure) circuit, or poor connector contact • Malfunction of the engine-ECU

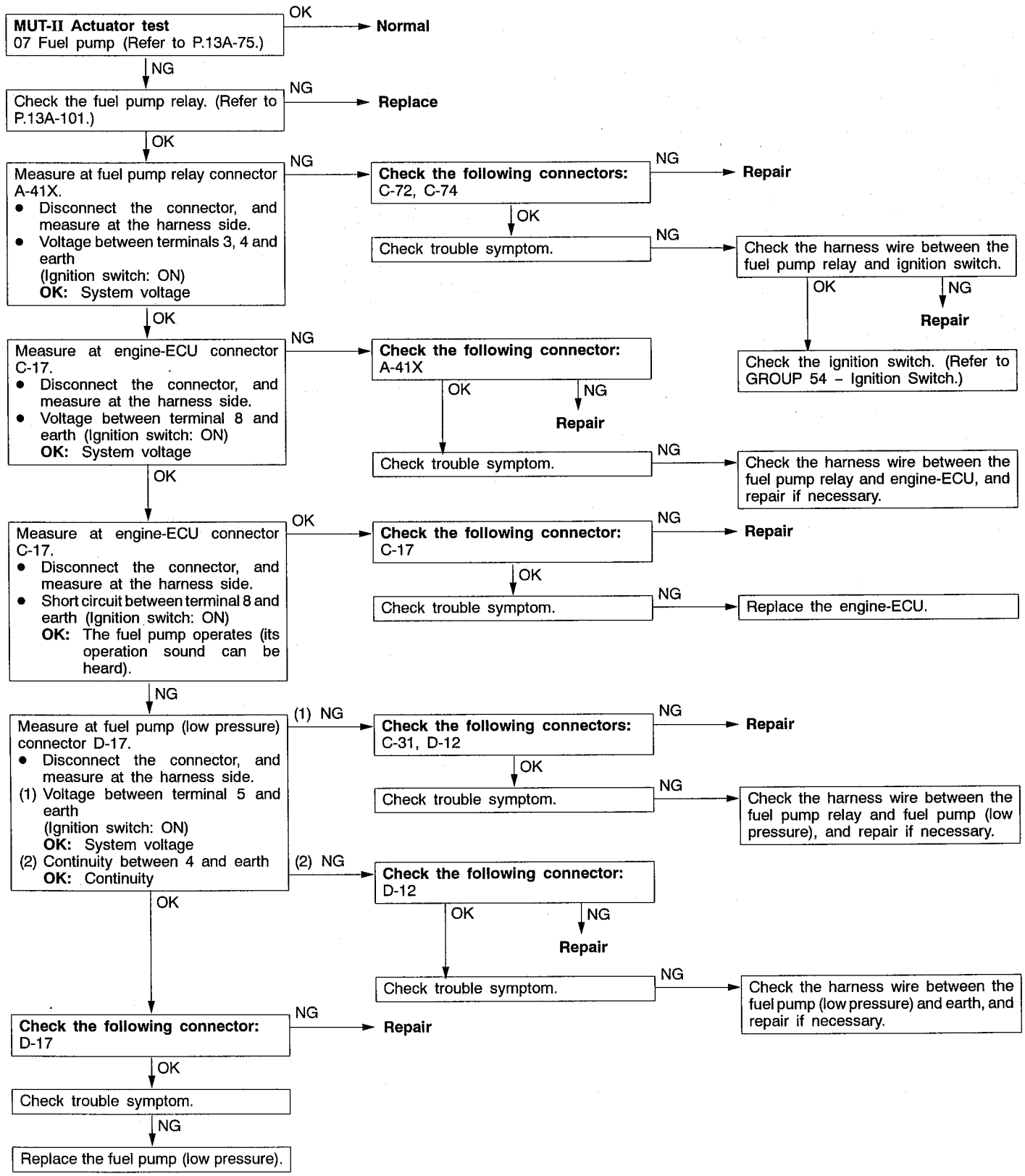

INSPECTION PROCEDURE 29

Oxygen sensor system	Probable cause
The oxygen sensor detects oxygen content in the exhaust gas and converts the value to voltage signal, and sends the signal to the engine-ECU. Based on this signal, the engine-ECU controls the fuel injection so that air-fuel ratio becomes theoretical air-fuel ratio.	• Malfunction of the oxygen sensor • Open circuit or short-circuited harness wire in the oxygen sensor circuit, or poor connector contact • Malfunction of the engine-ECU

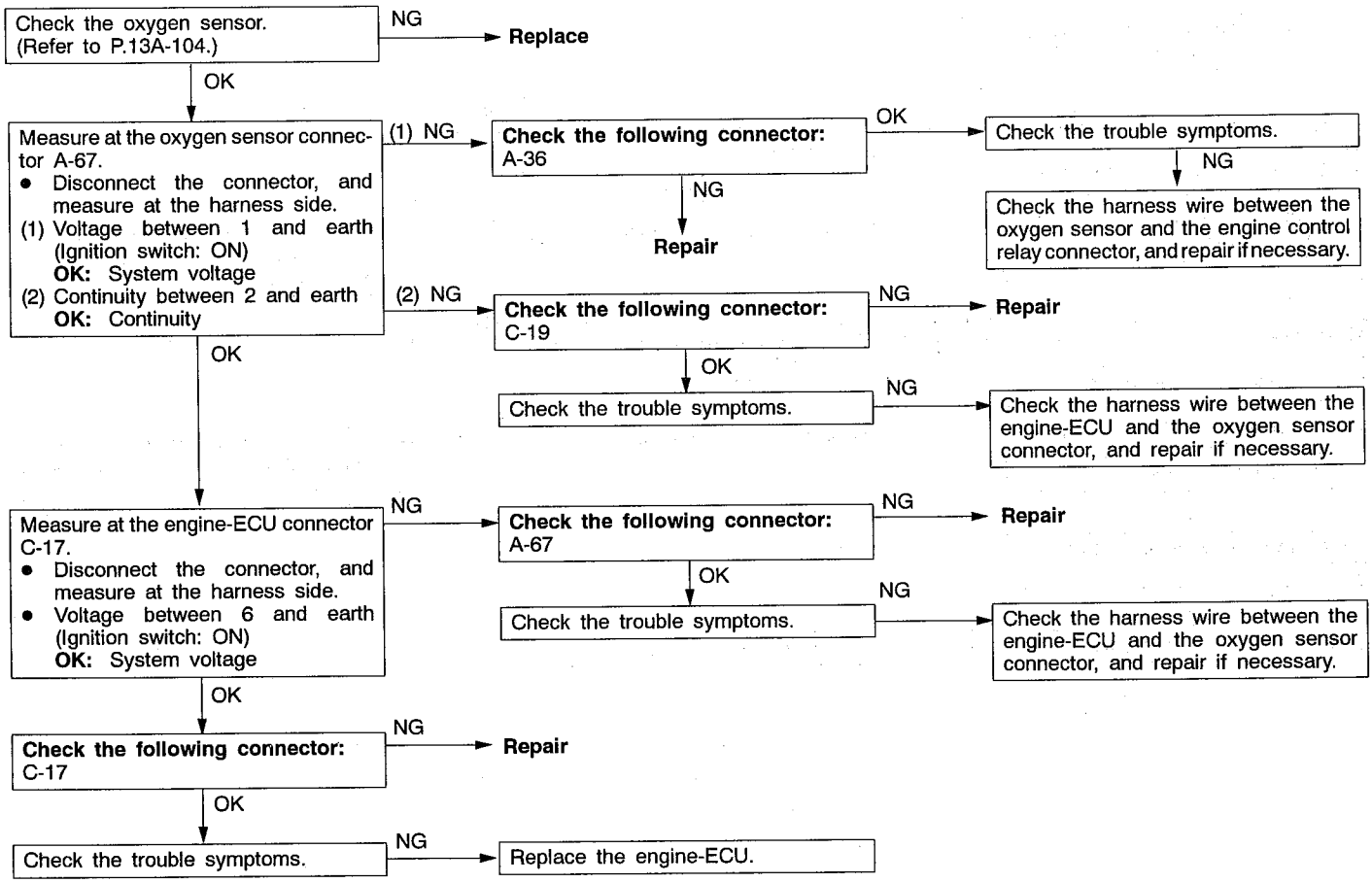

INSPECTION PROCEDURE 30

EGR valve system	Probable cause
The engine-ECU controls the EGR valve in order to control the amount of exhaust gas mixed in the intake air.	• Malfunction of the EGR valve • Open circuit or short-circuited harness wire in the EGR valve circuit • Malfunction of the engine-ECU

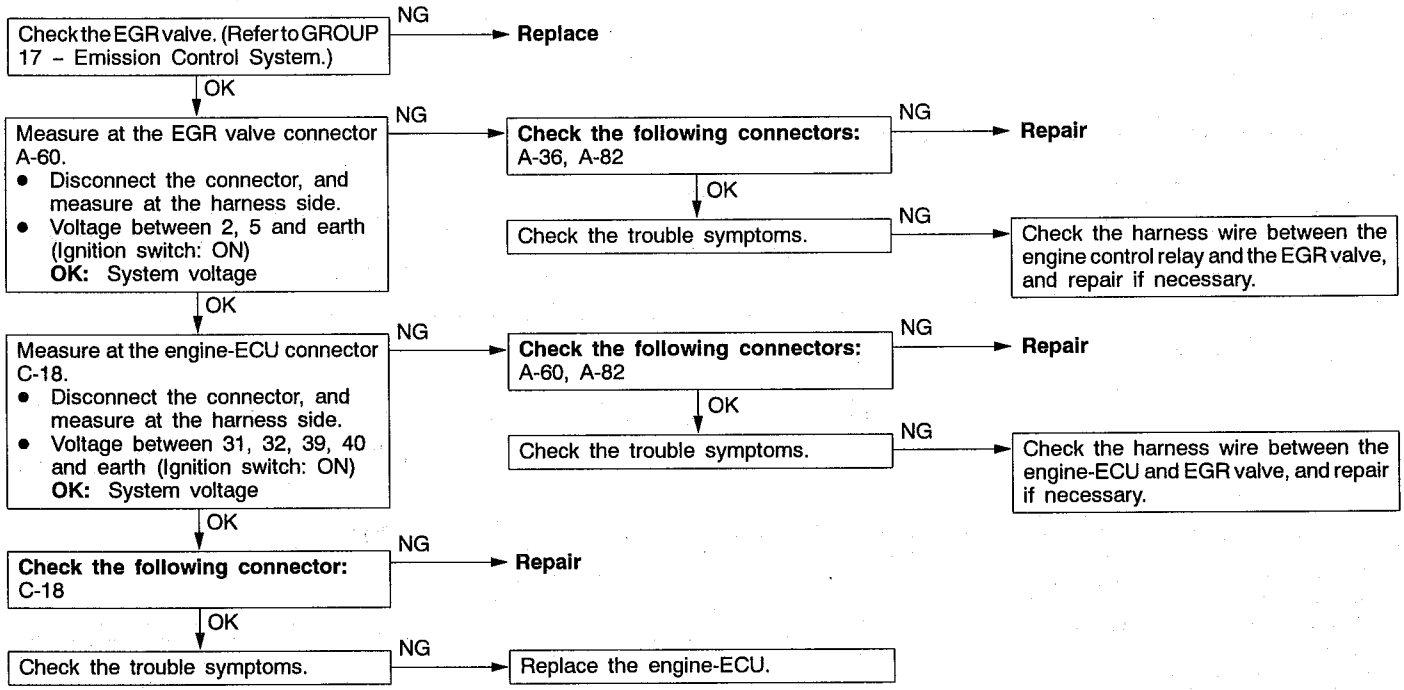

INSPECTION PROCEDURE 31

Purge control solenoid valve system	Probable cause
The engine-ECU controls the purge control solenoid valve in order to control the purge air coming from the canister.	• Malfunction of the purge control solenoid valve • Open circuit or short-circuited harness wire in the purge control solenoid valve circuit • Malfunction of the engine-ECU

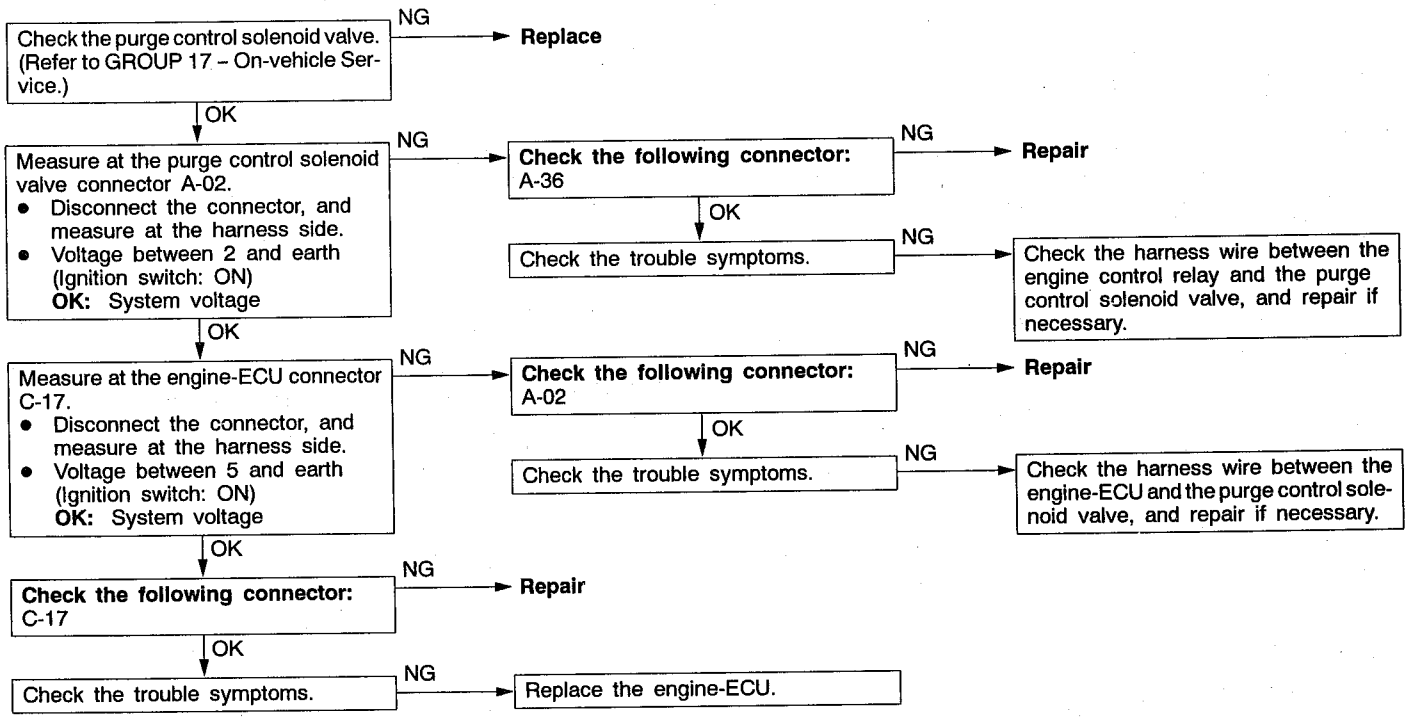

INSPECTION PROCEDURE 32

Power steering fluid pressure switch system	Probable cause
The power steering fluid pressure switch sends a signal to the engine-ECU according to power steering load. Based on this signal, the engine-ECU controls the throttle control servo so that idle speed increases when the power steering is in operation.	• Malfunction of the power steering fluid pressure switch • Open circuit or short-circuited harness wire in the power steering fluid pressure switch circuit, or poor connector contact • Malfunction of the engine-ECU

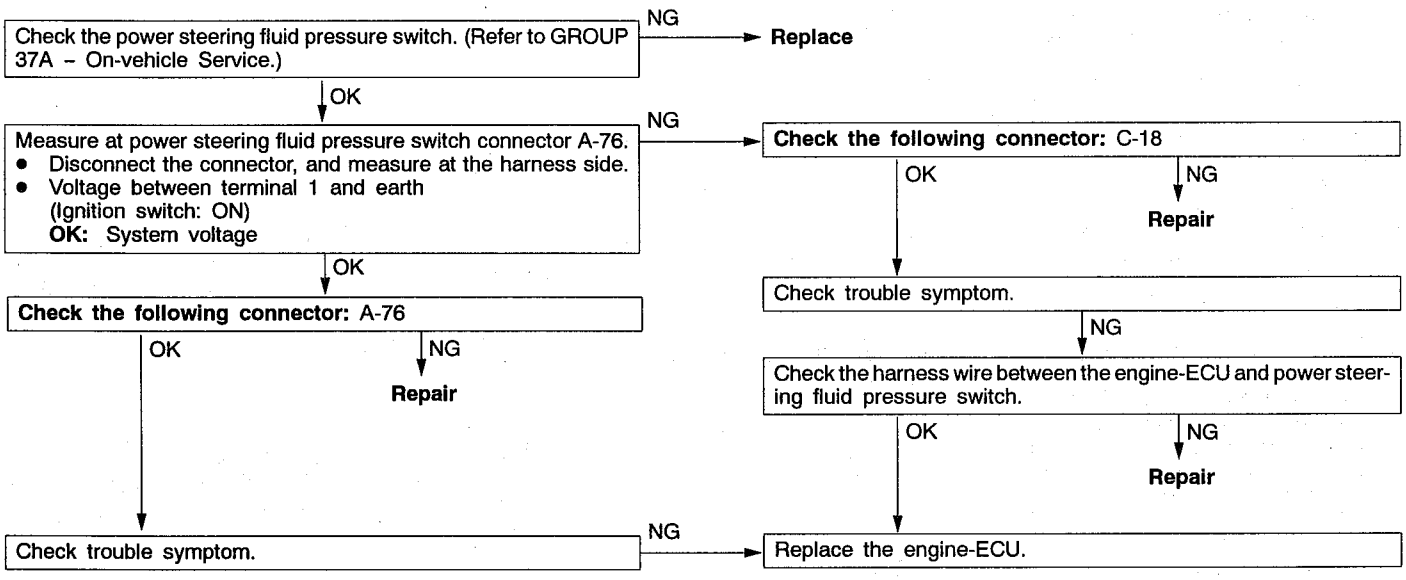

INSPECTION PROCEDURE 33

A/C switch and A/C relay system	Probable cause
If the engine-ECU receives a 'A/C on' signal, it operates the throttle control servo and A/C compressor magnetic clutch so that idle speed increases.	• Malfunction of the A/C control system • Malfunction of the A/C switch • Open circuit or short-circuited harness wire in the A/C switch circuit, or poor connector contact • Malfunction of the engine-ECU

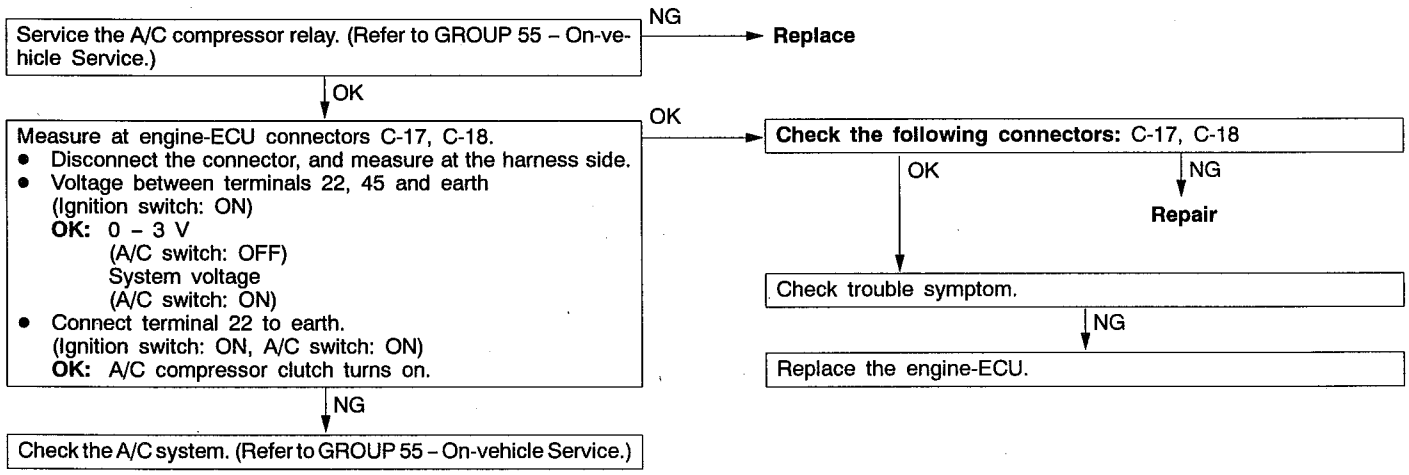

INSPECTION PROCEDURE 34

Stop lamp switch system	Probable cause
The engine-ECU determines whether the brake pedal is depressed or not, by means of the stop lamp switch input signal.	• Malfunction of the stop lamp switch • Open circuit or short-circuited harness wire in the stop lamp circuit, or poor connector contact • Malfunction of the engine-ECU

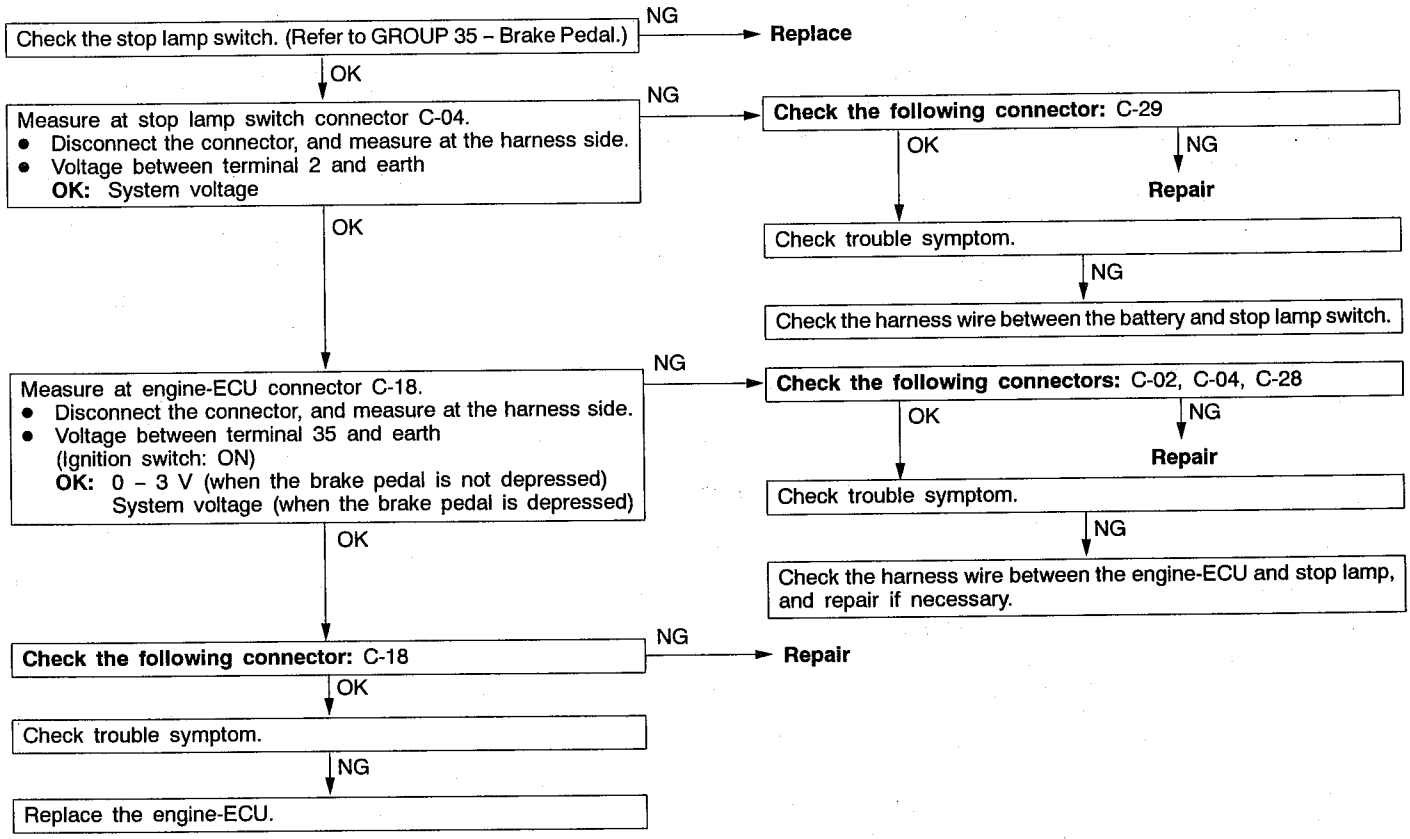

INSPECTION PROCEDURE 35

Small lamp switch	Probable cause
The engine-ECU determines whether the small lamp switch is on or off. According to that information, the engine-ECU controls alternator output current when the vehicle is started.	• Improper connector contact, open circuit or short-circuited harness wire in the taillamp relay circuit • Malfunction of the engine-ECU

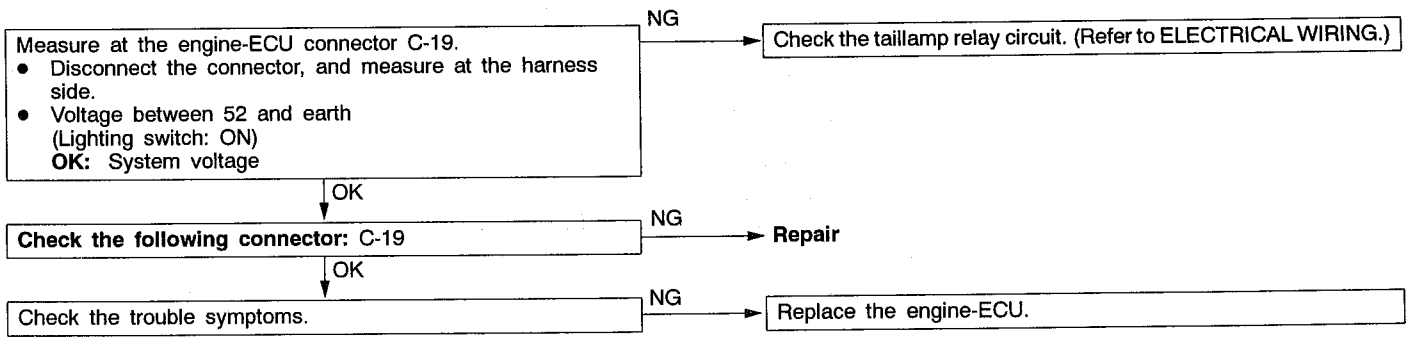

DATA LIST REFERENCE TABLE

Caution
When shifting the select lever to D range, the brakes should be applied so that the vehicle does not move forward.

NOTE
*1: Within four minutes after starting the engine
*2: In a new vehicle [driven approximately 500 km or less], the injector drive time is sometimes 10% longer than the standard time.
*3: The accelerator pedal position switch normally turns off when the voltage of the accelerator pedal position sensor (1st channel) is 250 – 550 mV higher than the voltage at the idle position. If the accelerator pedal position switch turns back on after the accelerator pedal position sensor voltage has risen by 100 mV and the throttle valve has opened, the accelerator pedal position switch and the accelerator pedal position sensor (1st channel) need to be adjusted.

Item No.	Check items	Requirements		Normal condition	Inspection procedure No.	Reference page
11	Oxygen sensor	Engine: After warm-up	Idling	0 mV*1	Procedure No.29	13A-65
			Sudden racing	600 – 1,000 mV		
			2,500 r/min	400 mV or less ↔ 600 – 1,000 mV (alternates)		
12	Air flow sensor	• Engine coolant temperature: 80 – 95°C • Lamps, electric cooling fan and all accessories: OFF • Transmission: Neutral (A/T: P range)	Idling	20 – 55 Hz	–	–
			2,500 r/min	65 – 85 Hz		
			Racing	Frequency increases in response to racing.		
13	Intake air temperature sensor	Ignition switch: ON	Intake air temperature: –20°C	–20°C	Code No.13	13A-16
			Intake air temperature: 0°C	0°C		
			Intake air temperature: 20°C	20°C		
			Intake air temperature: 40°C	40°C		
			Intake air temperature: 80°C	80°C		

Item No.	Check items	Requirements		Normal condition	Inspection procedure No.	Reference page
14	Throttle position sensor (2nd channel)	• Engine coolant temperature: 80 – 95°C • Ignition switch: ON (Engine stopped)	Release the accelerator pedal.	4,000 – 4,800 mV	Code No.14	13A-17
			Depress the accelerator pedal gradually.	Voltage decreases in response to the pedal depression.		
			Depress the accelerator pedal fully.	100 – 1,100 mV		
16	Power supply voltage	Ignition switch: ON		System voltage	Procedure No.23	13A-60
18	Cranking signal (Ignition switch – ST)	Transmission: Neutral (A/T: P range)	Engine: Stopped	OFF	Procedure No.25 <M/T> Procedure No.26 <A/T>	13A-61 <M/T> 13A-62 <A/T>
			Engine: Cranking	ON		
21	Engine coolant temperature sensor	Ignition switch: ON	Engine coolant temperature: –20°C	–20°C	Code No.21	13A-18
			Engine coolant temperature: 0°C	0°C		
			Engine coolant temperature: 20°C	20°C		
			Engine coolant temperature: 40°C	40°C		
			Engine coolant temperature: 80°C	80°C		
22	Crank angle sensor	• Engine: cranking • Tachometer: Connected	Compare the engine speed readings on the tachometer and the MUT-II.	Accord	–	–
		• Engine: Idling • Accelerator pedal position switch: ON • Transmission: Neutral (A/T: P range)	Engine coolant temperature: –20°C	1,200 – 1,400 r/min		
			Engine coolant temperature: 0°C	1,100 – 1,300 r/min		
			Engine coolant temperature: 20°C	1,000 – 1,200 r/min		
			Engine coolant temperature: 50°C	750 – 950 r/min		
			Engine coolant temperature: 80°C	550 – 850 r/min*1		

Item No.	Check items	Requirements		Normal condition	Inspection procedure No.	Reference page
25	Barometric pressure sensor	Ignition switch: ON	Altitude: 0 m	101 kPa	Code No.25	13A-22
			Altitude: 600 m	95 kPa		
			Altitude: 1,200 m	88 kPa		
			Altitude: 1,800 m	81 kPa		
26	Accelerator pedal position switch	Ignition switch: ON (Depress and release the accelerator pedal several times)	Release the accelerator pedal.	ON	Procedure No.27	13A-63
			Depress the accelerator pedal slightly.	OFF		
27	Power steering fluid pressure switch	Engine: Idling	Steering wheel stationary	OFF	Procedure No.32	13A-68
			Steering wheel turning	ON		
28	A/C switch	Engine: Idling (The A/C compressor is running when the A/C switch is on.)	A/C switch: OFF	OFF	Procedure No.33	13A-68
			A/C switch: ON	ON		
29	Inhibitor switch <A/T>	Ignition switch: ON	Selector lever: P or N	P, N	Procedure No.26	13A-62
			Selector lever: D, 2, L or R	D, 2, L, R		
31	Small lamp switch	Engine: Idling	Lighting switch: OFF	OFF	Procedure No.35	13A-69
			Lighting switch: ON	ON		
34	Air flow sensor reset signal	Engine: After having warmed up	Engine is idling	ON	Code No.12	13A-15
			3,000 r/min	OFF		
37	Volumetric efficiency	• Engine coolant temperature: 80 – 95°C • Lamps, electric cooling fan and all accessories: OFF • Transmission: Neutral (A/T: P range)	Engine is idling	30 – 50%	–	–
			2,500 r/min	30 – 50%		
			Engine is suddenly raced	Volumetric efficiency increases in response to racing		
38	Crank angle sensor	• Engine: Cranking [reading is possible at 2,000 r/min or less] • Tachometer: Connected		Engine speeds displayed on the MUT-II and tachometer are identical.	–	–

Item No.	Check items	Requirements		Normal condition	Inspection procedure No.	Reference page
41	Injector drive time *2	• Engine coolant temperature: 80 – 95°C • Lamps, electric cooling fan and all accessories: OFF • Transmission: Neutral (A/T: P range)	Idling	0.5 – 0.7 ms*1	–	–
			2,500 r/min	0.4 – 0.8 ms		
			Sudden racing	Increases		
44	Ignition advance	• Engine: After warm-up • Set a timing light.	Idling	12 – 20°BTDC *2	Code No.44	13A-26
			2,500 r/min	20 – 40°BTDC		
49	A/C relay	Engine: After warm-up, idling	A/C switch: OFF	OFF (compressor clutch is not operating)	Procedure No.33	13A-68
			A/C switch: ON	ON (compressor clutch is operating)		
66	Brake vacuum sensor	• Engine coolant temperature: 80 – 95°C • Lamps, electric cooling fan and all accessories: OFF • Transmission: Neutral (A/T: P range)	Stop the engine from idling speed, and then depress the brake pedal several times with the ignition switch on.	Displayed pressure increases.	Code No.66	13A-30
67	Stop lamp switch	Ignition switch: ON	Brake pedal: Depressed	OFF	Procedure No.34	13A-69
			Brake pedal: Released	ON		
68	EGR valve	• Engine coolant temperature: 80 – 95°C • Lamps, electric cooling fan and all accessories: OFF • Transmission: Neutral (A/T: P range)	Idling	0 – 15 STEP	Procedure No.30	13A-66
			2,500 r/min	0 – 10 STEP		

Item No.	Check items	Requirements		Normal condition	Inspection procedure No.	Reference page
74	Fuel pressure sensor	• Engine coolant temperature: 80 – 95°C • Lamps, electric cooling fan and all accessories: OFF • Transmission: Neutral (A/T: P range)	After 3 minutes have passed at idling condition	4 – 6.9 MPa	Code No.56	13A-27
77	Accelerator pedal position sensor (2nd channel)	Ignition switch: ON	Release the accelerator pedal.	700 – 1,400 mV	Code No.77	13A-31
			Depress the accelerator pedal gradually.	Increases in response to the pedal depression stroke.		
			Depress the accelerator pedal fully.	4,100 mV or more		
78	Accelerator pedal position sensor *3	Ignition switch: ON	Release the accelerator pedal.	935 – 1,135 mV	Code No.78	13A-32
			Depress the accelerator pedal gradually.	Increases in response to pedal depression stroke.		
			Depress the accelerator pedal fully.	4,100 mV or more		
79	Throttle position sensor (1st channel)	• Engine coolant temperature: 80 – 95°C • Ignition switch: ON (Engine stopped)	Release the accelerator pedal.	450 – 800 mV	Code No.79	13A-33
			Depress the accelerator pedal gradually.	Increases in response to pedal depression stroke.		
			Depress the accelerator pedal fully.	3,900 – 4,900 mV		
		Engine: After warm-up, idling	No load	450 – 1,000 mV		
			A/C switch: OFF → ON	Increases by 100 – 600 mV.		
			Selector lever: N → D range	Increases by 0 – 200 mV.		
99	Fuel injection mode	Engine: After warm up	Idling (for several minutes after engine start)	Lean compression	–	–
			2,500 r/min	Stoichio metric feedback		
			Sudden racing after idle position	Open loop		

ACTUATOR TEST REFERENCE TABLE

Item No.	Inspection item	Drive contents	Inspection contents	Normal condition	Inspection procedure No.	Reference page
01	Injectors	Cut fuel to No. 1 injector	Engine: After having warmed up/Engine is idling (Cut the fuel supply to each injector in turn and check cylinders which don't affect idling.)	Idling condition becomes different (becomes unstable).	Code No. 41	13A-24
02		Cut fuel to No. 2 injector				
03		Cut fuel to No. 3 injector				
04		Cut fuel to No. 4 injector				
07	Fuel pump (low pressure)	Fuel pump operates and fuel is recirculated.	Ignition switch: ON	Sound of operation is heard.	Procedure No. 28	13A-64
08	Purge control solenoid valve	Solenoid valve turns from OFF to ON.	Ignition switch: ON	Sound of operation can be heard when solenoid valve is driven.	Procedure No. 31	13A-67
17	Basic ignition timing	Set the engine-ECU to ignition timing adjustment mode	Engine: Idling Timing light is set	5°BTDC	–	–
21	Fan controller	Drive the fan motor	Ignition switch: ON	The fan motor operates	Procedure No.20	13A-58
34	Electronic-controlled throttle valve system	Close the throttle valve fully	Ignition switch: ON	Operation sound can be heard	Code No.91	13A-34

CHECK AT THE ENGINE-ECU TERMINALS

TERMINAL VOLTAGE CHECK CHART

Engine-ECU Connector Terminal Arrangement

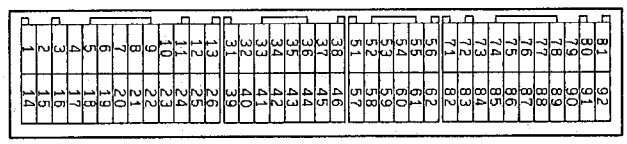

9FU0393

Terminal No.	Check item	Check requirements (engine condition)		Normal condition
1	No.1 injector	Engine: Warm up, and then depress the accelerator pedal suddenly from the idle speed.		Decreases slightly for short time from 9 – 13 V.
14	No.2 injector			
2	No.3 injector			
15	No.4 injector			
3	GDI ECO indicator lamp	Engine: idling		0 – 3 V
		Engine: Depress the accelerator pedal suddenly from the idle speed.		System voltage
5	Purge control solenoid valve	• Engine coolant temperature: 80 – 95°C • Ignition switch: ON	Engine: stopped	System voltage
			Engine: Start the engine, and then increase engine speed up to 3,500 r/min.	Voltage decreases.
6	Oxygen sensor heater	Engine: idling		0 – 3 V
		Engine: 3,500 r/min		System voltage
8	Fuel pump relay	Ignition switch: ON	Engine: stopped	System voltage
			Engine: Idling	0 – 3 V
10	No.1 ignition coil	Engine: 3,000 r/min		0.1 – 2.0 V
11	No.2 ignition coil			
23	No.3 ignition coil			
24	No.4 ignition coil			
12	Power supply	Ignition switch: ON		System voltage
25				
16	Throttle valve control servo relay	Ignition switch: OFF		0 – 0.3 V
		Ignition switch: ON		0.5 – 1.0 V
19	Air flow sensor reset signal	Engine: idling		0 – 1 V
		Engine: 3,000 r/min		6 – 9 V

Terminal No.	Check item	Check requirements (engine condition)		Normal condition
20	Injector driver relay	Ignition switch: OFF		0 – 0.1 V
		Ignition switch: ON		0.5 – 1.0 V
21	Fan controller	Radiator and condenser fans are not operating.		0 – 0.3 V
		Radiator and condenser fans are operating.		0.7 V or more
22	A/C relay	• Engine: idling • A/C switch: OFF → ON (Compressor is operating)		System voltage, or changes from momentarily 6 V or more to 0 – 3 V
31	EGR valve (C)	Ignition switch: Immediately after turning ON		5 – 8 V (fluctuates for approx. three seconds)
32	EGR valve (D)			
39	EGR valve (A)			
40	EGR valve (B)			
33	Alternator G terminal	• Engine: Warm up, and then idling • Radiator fan: not operating • Headlamp: OFF → ON • Stop lamp: OFF → ON • Rear defogger switch: OFF → ON		Voltage increases by 0.2 – 3.5 V
41	Alternator FR terminal	• Engine: Warm up, and then idling • Radiator fan: not operating • Headlamp: OFF → ON • Stop lamp: OFF → ON • Rear defogger: OFF → ON		Voltage decreases
35	Stop lamp switch	Depress the brake pedal.		System voltage
		Release the brake pedal.		0 – 3 V
36	Engine warning lamp	Ignition switch: OFF → ON		0 – 3 V → System voltage (after several seconds)
37	Power steering fluid pressure switch	Engine: Warm up, and then idling	Steering wheel stationary	System voltage
			Steering wheel turning	0 – 3 V
38	Engine control relay	Ignition switch: OFF		System voltage
		Ignition switch: ON		0 – 3 V
42	Brake vacuum sensor	Engine: Stop the engine from idle speed, turn the ignition switch ON, and then depress the brake pedal several times.		Voltage increases

Terminal No.	Check item	Check requirements (engine condition)		Normal condition
45	A/C switch	Engine: idling	A/C switch: OFF	0 – 3 V
			A/C switch: ON (Compressor is operating)	System voltage
51	Injector open circuit check signal	Engine: Increase engine speed from idle speed to 4,000 r/min.		Decreases slightly (approx.0.7 V) from 4.5 V – 5.0 V.
52	Small lamp switch	Lighting switch: OFF		0 – 3 V
		Lighting switch: ON (Taillamp: ON)		System voltage
57	Accelerator pedal position switch	Ignition switch: ON	Release the accelerator pedal.	0 – 1 V
			Depress the accelerator pedal slightly.	4 V or more
58	Tachometer output	Engine: 3,000 r/min		2.0 – 9.0 V
71	Ignition switch – ST	Engine: Cranking		8 V or more
72	Intake air temperature sensor	Ignition switch: ON	Intake air temperature: 0°C	3.2 – 3.8 V
			Intake air temperature: 20°C	2.3 – 2.9 V
			Intake air temperature: 40°C	1.5 – 2.1 V
			Intake air temperature: 80°C	0.4 – 1.0 V
73	A/C thermo sensor	• Temperature at sensing portion: Approx. 25°C • Ignition switch: ON		2.0 – 2.9 V
74	Fuel pressure sensor	Engine: Idling		0.3 – 4.7 V
76	Oxygen sensor	Engine: Warm up, and then hold the engine speed at 2,500 r/min (Use a digital voltmeter).		0 ↔ 0.8 V alternates.
77	Sensor power supply	Ignition switch: ON		4.5 – 5.5 V
81	Power supply to accelerator pedal position sensor	Ignition switch: ON		4.5 – 5.5 V
80	Back-up power source	Ignition switch: OFF		System voltage

Terminal No.	Check item	Check requirements (engine condition)		Normal condition
82	Ignition switch – IG	Ignition switch: ON		System voltage
83	Engine coolant temperature sensor	Ignition switch: ON	Engine coolant temperature: 0°C	3.2 – 3.8 V
			Engine coolant temperature: 20°C	2.3 – 2.9 V
			Engine coolant temperature: 40°C	1.3 – 1.9 V
			Engine coolant temperature: 80°C	0.3 – 0.9 V
84	Throttle position sensor (2nd channel)	Ignition switch: ON	Release the accelerator pedal.	4.0 – 4.8 V
			Depress the accelerator pedal fully.	0.1 – 1.1 V
85	Barometric pressure sensor	Ignition switch: ON	Altitude: 0 m	3.7 – 4.3 V
			Altitude: 1,200 m	3.2 – 3.8 V
86	Vehicle speed sensor	• Ignition switch: ON • Move the vehicle forward.		0 V ↔ Battery voltage (alternates repeatedly)
87	Accelerator pedal position sensor (1st channel)	Ignition switch: ON	Release the accelerator pedal.	0.935 – 1.135 V
			Depress the accelerator pedal fully.	4.1 V or more
88	Camshaft position sensor	Engine: Cranking		0.3 – 3.0 V
		Engine: Idling		0.5 – 3.5 V
89	Crank angle sensor	Engine: Cranking		0.4 – 4.0 V
		Engine: Idling		1.5 – 2.5 V
90	Air flow sensor	Engine: Idling		2.2 – 3.2 V
		Engine: 2,500 r/min		
91	Inhibitor switch <A/T>	Ignition switch: ON	Selector lever: P or N range	0 – 3 V
			Selector lever: Other than P or N range	8 – 14 V

CHECK CHART FOR RESISTANCE AND CONTINUITY BETWEEN TERMINALS

1. Turn the ignition switch to OFF.
2. Disconnect the engine-ECU connector.
3. Measure the resistance and check for continuity between the terminals of the engine-ECU harness-side connector while referring to the check chart.

   NOTE
   (1) When measuring resistance and checking continuity, a harness for checking contact pin pressure should be used instead of inserting a test probe.
   (2) Checking need not be carried out in the order given in the chart.

   Caution
   If the terminals that should be checked are mistaken, or if connector terminals are not correctly shorted to earth, damage may be caused to the vehicle wiring, sensors, engine-ECU and/or ohmmeter.
   Be careful to prevent this!

4. If the ohmmeter shows any deviation from the standard value, check the corresponding sensor, actuator and related electrical wiring, and then repair or replace.
5. After repair or replacement, recheck with the ohmmeter to confirm that the repair or replacement has corrected the problem.

Engine-ECU Harness Side Connector Terminal Arrangement

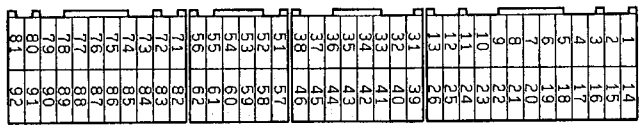

9FU0392

Terminal No.	Check item	Standard value, normal condition (check requirements)
5 – 12	Purge control solenoid valve	36 – 44 Ω (at 20°C)
6 – 12	Oxygen sensor heater control	11 – 18 Ω (at 20°C)
13 – Body earth	Earth	Continuity (0 Ω)
26 – Body earth		
31 – 12	EGR valve (C)	15 – 20 Ω (at 20°C)
32 – 12	EGR valve (D)	
39 – 12	EGR valve (A)	
40 – 12	EGR valve (B)	
57 – 92	Accelerator pedal position switch	Continuity (when the accelerator pedal is released)
		No continuity (when the accelerator pedal is slightly depressed)
72 – 92	Intake air temperature sensor	5.3 – 6.7 kΩ (when intake air temperature is 0°C)
		2.3 – 3.0 kΩ (when intake air temperature is 20°C)
		1.0 – 1.5 kΩ (when intake air temperature is 40°C)
		0.30 – 0.42 kΩ (when intake air temperature is 80°C)
83 – 92	Engine coolant temperature sensor	5.1 – 6.5 kΩ (when engine coolant temperature is 0°C)
		2.1 – 2.7 kΩ (when engine coolant temperature is 20°C)
		0.9 – 1.3 kΩ (when engine coolant temperature is 40°C)
		0.26 – 0.36 kΩ (when engine coolant temperature is 80°C)
91 – Body earth	Inhibitor switch <A/T>	Continuity (when the selector lever is at P or N range)
		No continuity (when the selector lever is at a range other than P or N)

CHECK AT THE THROTTLE VALVE CONTROLLER TERMINALS

TERMINAL VOLTAGE CHECK CHART

Throttle Valve Controller Terminal Arrangement

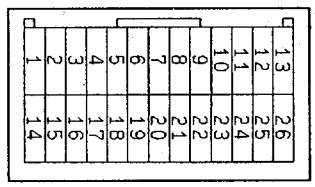

7FU2121

Terminal No.	Check items	Requirements		Normal value
1	Throttle valve control servo (A+)	• Ignition switch: ON • Accelerator pedal: Fully opened → fully closed		Decreases slightly from system voltage.
9	Throttle valve control servo (B+)			
14	Throttle valve control servo (A–)	• Ignition switch: ON • Accelerator pedal: Fully closed → fully opened		Decreases slightly (approx. 2 V) from system voltage.
15	Throttle valve control servo (B–)			
2	Power supply to throttle valve control servo	Ignition switch: ON		System voltage
19				
5	Power supply	Ignition switch: ON		System voltage
6	Sensor voltage	Ignition switch: ON		4.5 – 5.5 V
7	Throttle position sensor (1st channel)	Ignition switch: ON	Release the accelerator pedal.	0.45 – 0.8 V
			Depress the accelerator pedal fully.	3.9 – 4.9 V
20	Accelerator pedal position sensor (2nd channel)	Ignition switch: ON	Release the accelerator pedal.	0.7 – 1.4 V
			Depress the accelerator pedal fully.	4 V or more
22	Ignition switch – IG	Ignition switch: ON		System voltage

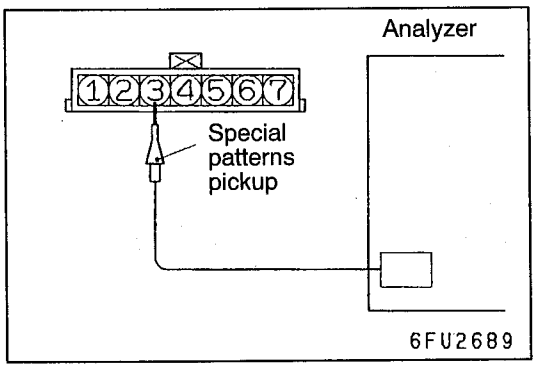

INSPECTION PROCEDURE USING AN ANALYZER

AIR FLOW SENSOR (AFS)

Measurement Method

1. Disconnect the air flow sensor connector, and connect the special tool (test harness: MB991709) in between. (All terminals should be connected.)
2. Connect the analyzer special patterns pickup to air flow sensor connector terminal 3.

Alternate Method (Test harness not available)

1. Connect the analyzer special patterns pickup to engine-ECU terminal 90.

Standard Wave Pattern

Observation conditions

Function	Special patterns
Pattern height	Low
Pattern selector	Display
Engine r/min	Idle speed

Standard wave pattern

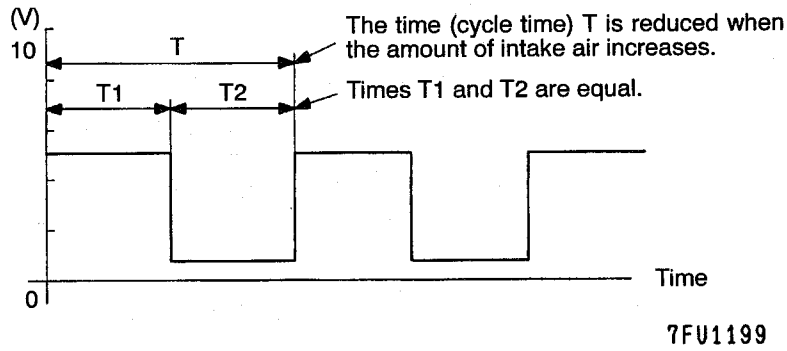

Observation conditions (from conditions above engine speed is increased by racing.)

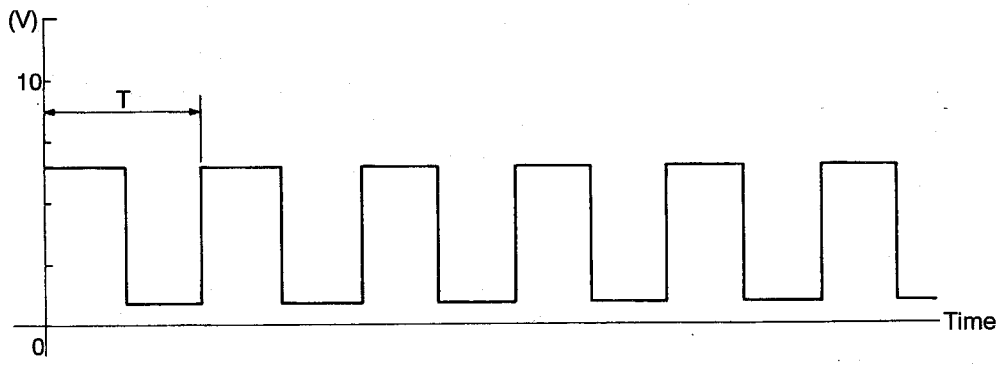

Wave Pattern Observation Points

Check that cycle time T becomes shorter and the frequency increases when the engine speed is increased.

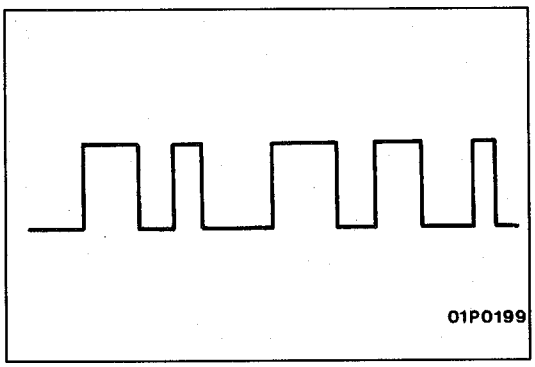

Examples of Abnormal Wave Patterns

- Example 1

  Cause of problem

  Sensor interface malfunction

  Wave pattern characteristics

  Rectangular wave pattern is output even when the engine is not started.

- Example 2

  Cause of problem

  Damaged rectifier or vortex generation column

  Wave pattern characteristics

  Unstable wave pattern with non-uniform frequency. However, when an ignition leak occurs during acceleration, the wave pattern will be distorted temporarily, even if the air flow sensor is normal.

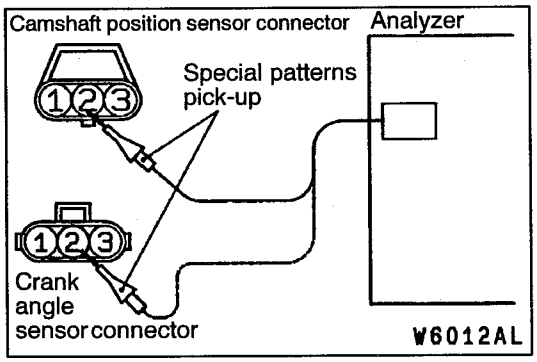

CAMSHAFT POSITION SENSOR AND CRANK ANGLE SENSOR

Measurement Method

1. Disconnect the camshaft position sensor connector and connect the special tool (test harness: MB991709) in between. (All terminals should be connected.)
2. Connect the analyzer special patterns pickup to camshaft position sensor terminal 2.
3. Disconnect the crank angle sensor connector and connect the special tool (test harness: MB991658) in between.
4. Connect the analyzer special patterns pickup to crank angle sensor terminal 2.

Alternate Method (Test harness not available)

1. Connect the analyzer special patterns pickup to engine-ECU terminal 88. (When checking the camshaft position sensor signal wave pattern.)
2. Connect the analyzer special patterns pickup to engine-ECU terminal 89. (When checking the crank angle sensor signal wave pattern.)

Standard Wave Pattern

Observation conditions

Function	Special patterns
Pattern height	Low
Pattern selector	Display
Engine r/min	Idle speed

Standard wave pattern

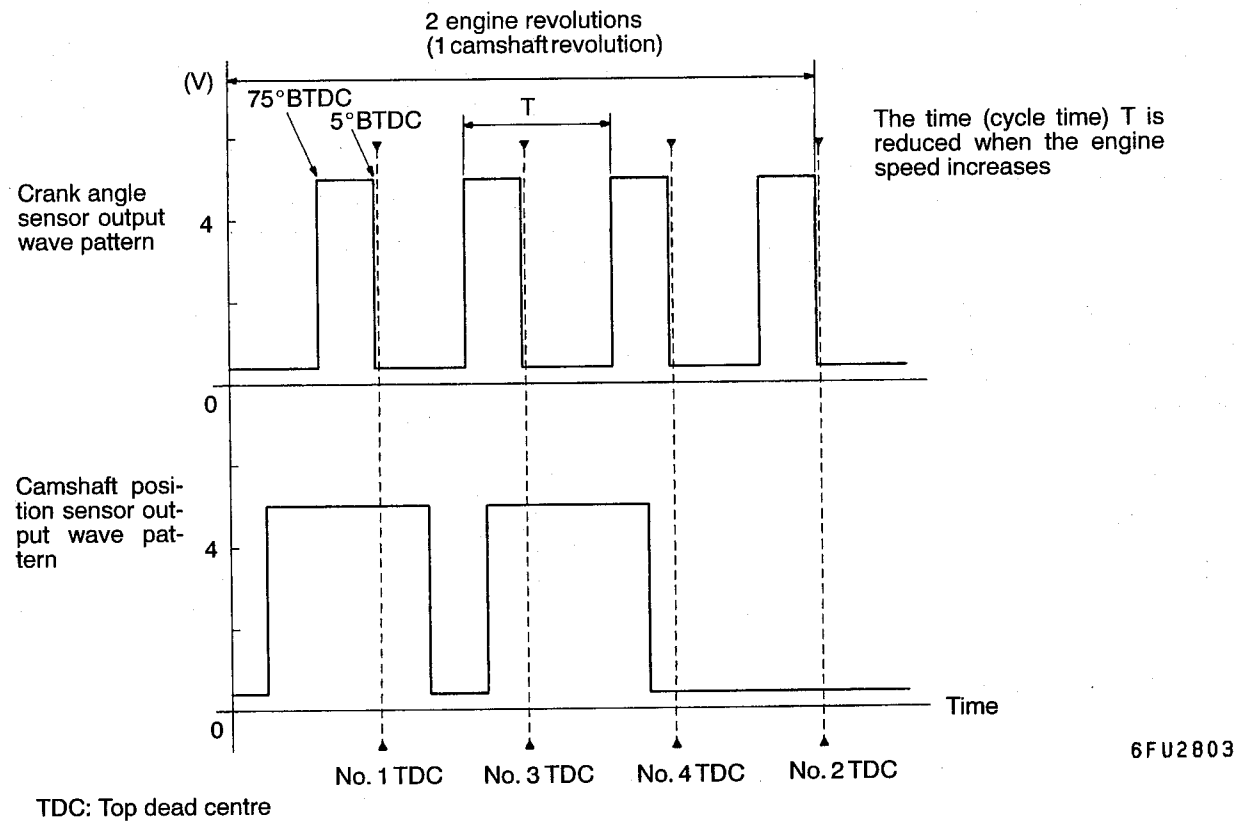

TDC: Top dead centre

Wave Pattern Observation Points

Check that cycle time T becomes shorter when the engine speed increases.

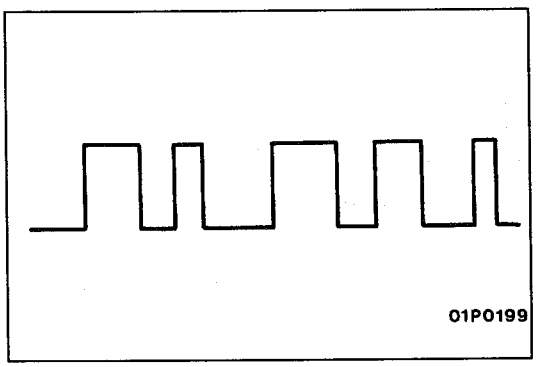

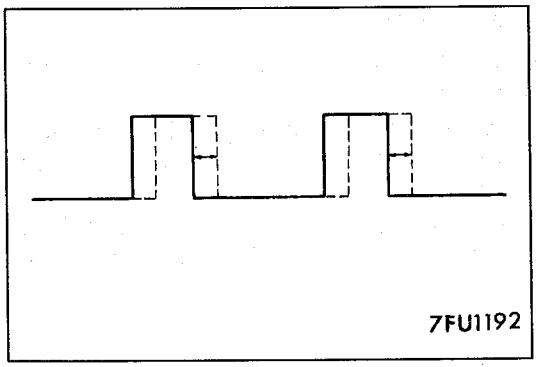

Examples of Abnormal Wave Patterns

- Example 1

  Cause of problem

  Sensor interface malfunction

  Wave pattern characteristics

  Rectangular wave pattern is output even when the engine is not started.

- Example 2

  Cause of problem

  Loose timing belt
  Abnormality in sensor disk

  Wave pattern characteristics

  Wave pattern is displaced to the left or right.

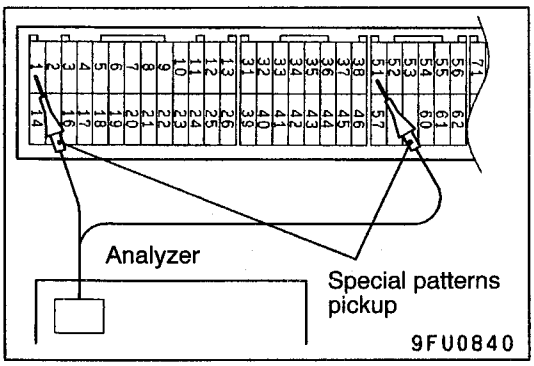

INJECTORS AND INJECTOR OPEN CIRCUIT CHECK SIGNAL

Measurement Method

1. Connect the analyzer special patterns pickup to terminal 1 (No.1 injector) of the engine-ECU connector.
2. Connect the analyzer special patterns pickup to terminal 51 (injector open circuit check signal) of the engine-ECU connector.
3. After checking terminal 1, check terminal 14 (No.2 injector), terminal 2 (No.3 injector) and terminal 15 (No.4 injector).

Standard Wave Pattern

Observation conditions

Function	Special pattern
Pattern height	Low
Pattern selector	Display
Engine r/min	Idle speed

Standard wave pattern

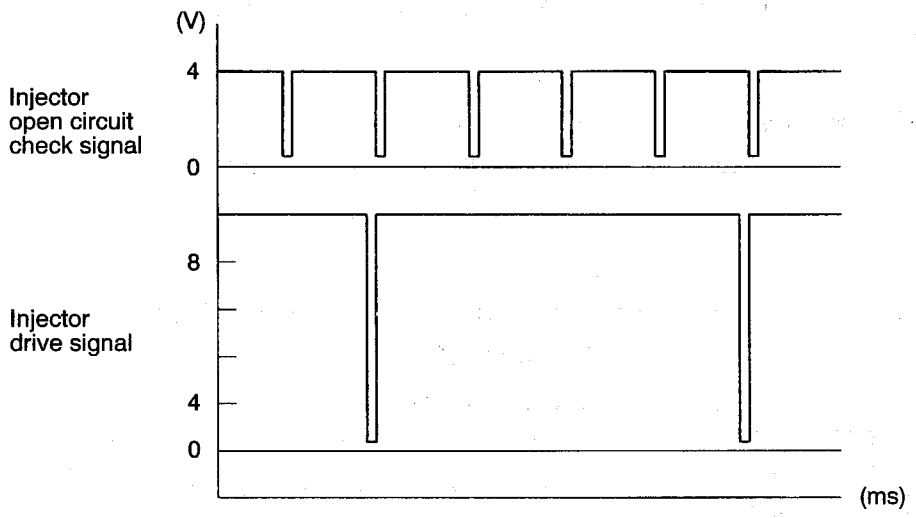

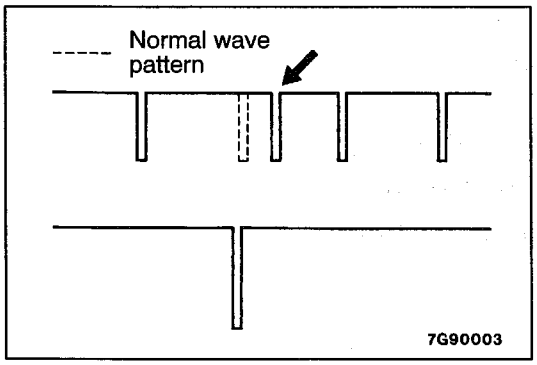

Wave Pattern Observation Points

- Check that the injector drive time is identical to the time displayed on the MUT-II.
- Check that the injector signals become greatly extended but soon return to their normal wave length when the engine is suddenly raced.
- Check that the injector open circuit check signal is synchronized with each rising portion of the injector drive signal.

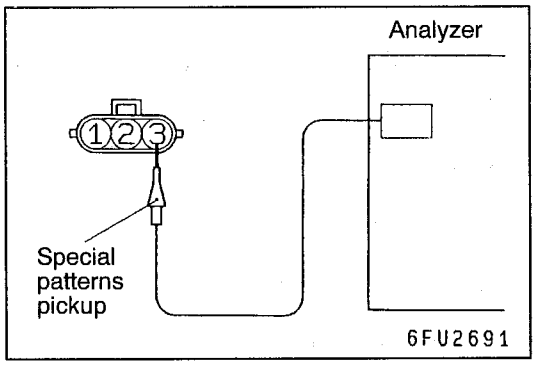

IGNITION COIL AND POWER TRANSISTOR

Power transistor control signal

Measurement Method

1. Disconnect the ignition coil connector, and connect the special tool (test harness: MB991658) in between. (All terminals should be connected.)
2. Connect the analyzer special patterns pickup to terminal 3 of each ignition coil connector in turn.

Alternate Method (Test harness not available)

1. Connect the analyzer special patterns pickup to engine-ECU terminal 10 (No. 1 ignition coil), terminal 11 (No. 2 ignition coil), terminal 23 (No. 3 ignition coil), terminal 24 (No. 4 ignition coil) respectively.

Standard Wave Pattern

Observation condition

Function	Special patterns
Pattern height	Low
Pattern selector	Display
Engine r/min	Approx. 1,200 r/min

Standard wave pattern

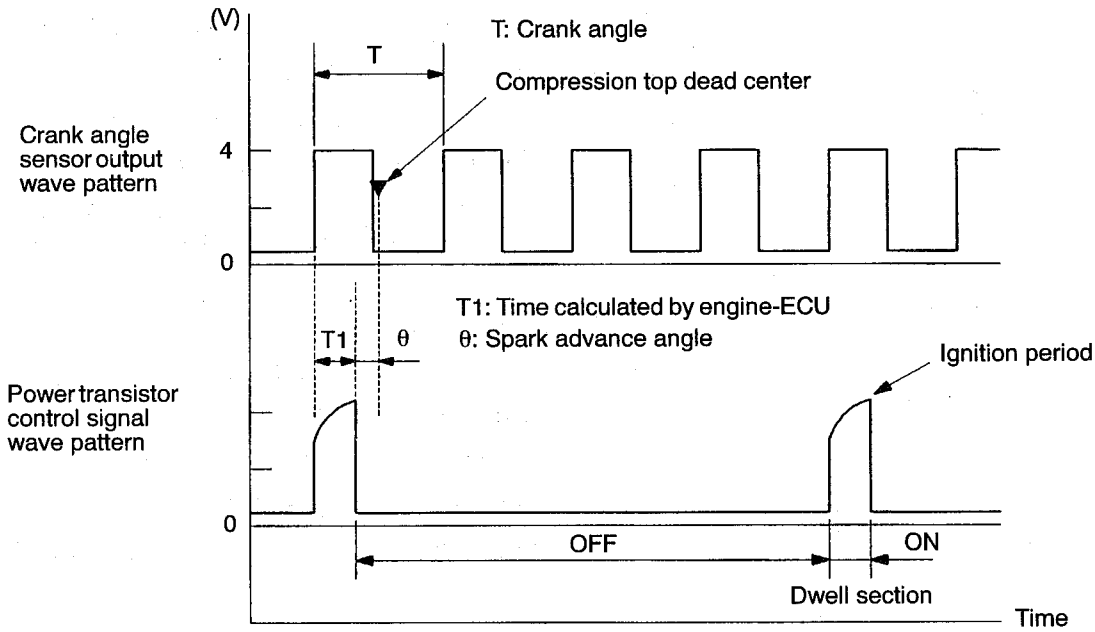

6FU2832

Wave Pattern Observation Points

Point: Condition of wave pattern build-up section and maximum voltage (Refer to abnormal wave pattern examples 1 and 2.)

Condition of wave pattern build-up section and maximum voltage	Probable cause
Rises from approx. 2V to approx. 4.5V at the top-right	Normal
2V rectangular wave	Open-circuit in ignition primary circuit
Rectangular wave at power voltage	Power transistor malfunction

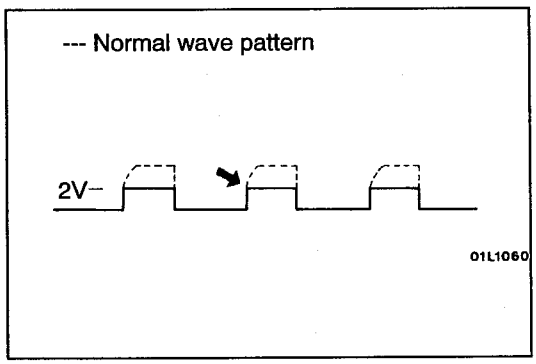

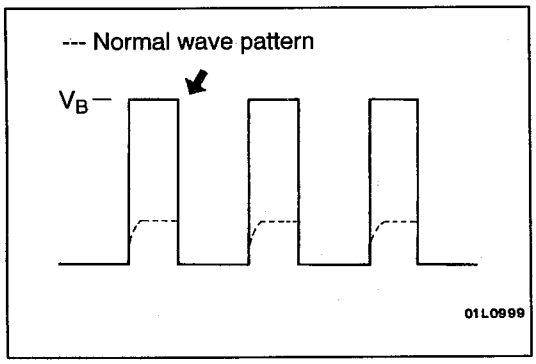

Examples of Abnormal Wave Patterns

- Example 1

  Wave pattern during engine cranking

  Cause of problem

  Open-circuit in ignition primary circuit

  Wave pattern characteristics

  Top-right part of the build-up section cannot be seen, and voltage value is approximately 2V too low.

- Example 2

  Wave pattern during engine cranking

  Cause of problem

  Malfunction in power transistor

  Wave pattern characteristics

  Power voltage results when the power transistor is ON.

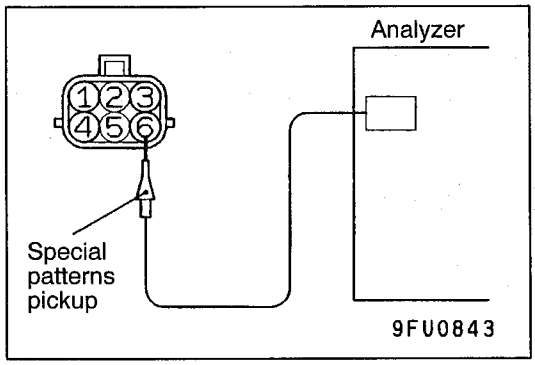

EGR VALVE (STEPPER MOTOR)

Measurement Method

1. Disconnect the EGR valve connector, and connect the special tool (test harness: MB991658) in between.
2. Connect the analyzer special patterns pickup to the EGR valve-side connector terminal 1, terminal 3, terminal 4 and terminal 6 respectively.

Alternate Method (Test harness not available)

1. Connect the analyzer special patterns pickup to engine-ECU terminal 39, connection terminal 40, connection terminal 31, and connection terminal 32 respectively.

Standard Wave Pattern

Observation conditions

Function	Special patterns
Pattern height	High
Pattern selector	Display
Engine condition	Racing

Standard wave pattern

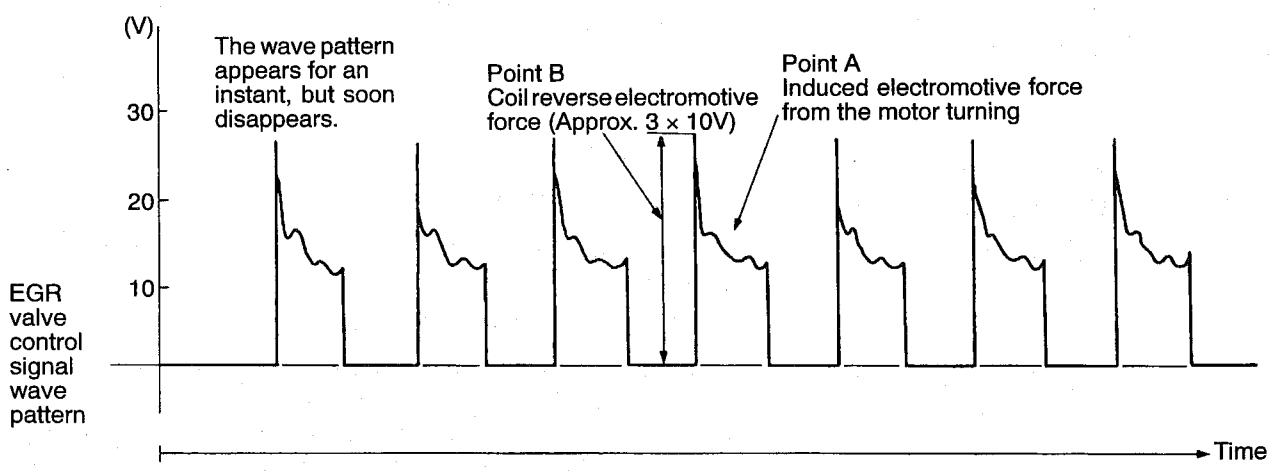

7FU1204

Wave Pattern Observation Points

Check that the standard wave pattern appears when the EGR control servo is operating.
Point A: Presence or absence of induced electromotive force from the motor turning. (Refer to the abnormal wave pattern.)

Contrast with standard wave pattern	Probable cause
Induced electromotive force does not appear or is extremely small.	Motor is malfunctioning

Point B: Height of coil reverse electromotive force

Contrast with standard wave pattern	Probable cause
Coil reverse electromotive force does not appear or is extremely small.	Short in the coil

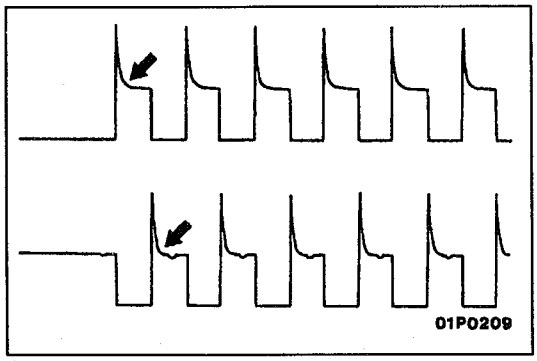

Examples of Abnormal Wave Pattern

- Example 1

  Cause of problem

  Motor is malfunctioning. (Motor is not operating.)

  Wave pattern characteristics

  Induced electromotive force from the motor turning does not appear.

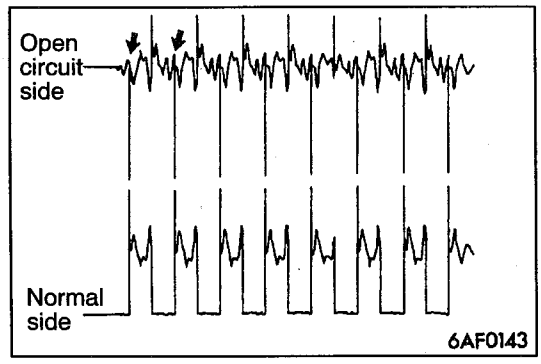

- Example 2

  Cause of problem

  Open circuit in the line between the EGR valve and the engine-ECU

  Wave pattern characteristics

  Current is not supplied to the motor coil on the open circuit side. (Voltage does not drop to 0 V.)
  Furthermore, the induced electromotive force waveform at the normal side is slightly different from the normal waveform.

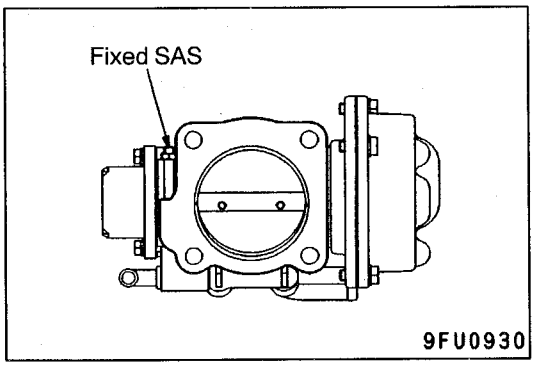

ON-VEHICLE SERVICE

Caution

(1) Never attempt to tamper the fixed SAS. The fixed SAS is precisely adjusted at factory.

(2) Should it be tampered, the full closed position of the throttle valve will be changed. This causes the engine-ECU to learn a wrong position of the throttle valve.

THROTTLE BODY (THROTTLE VALVE ARE) CLEANING

1. Start the engine, and warm it up until engine coolant temperature reaches 80°C. Then stop the engine.
2. Remove the air intake hose at the throttle body side.
3. Apply cleaning agent to the throttle valve through the intake port of the throttle valve, and then leave it for approx. five minutes.
4. Start the engine, race it several times, and then let it run at idle for approx. one minute.
5. If carbon deposits are not removed from the throttle vale area, repeat steps 3 and 4.
6. Install the air intake hose.
7. Use the MUT-II or disconnect the negative battery cable from the battery terminal in order to erase a diagnosis code. Wait for at least ten seconds, and then let the engine run at idle again for approx. ten minutes.

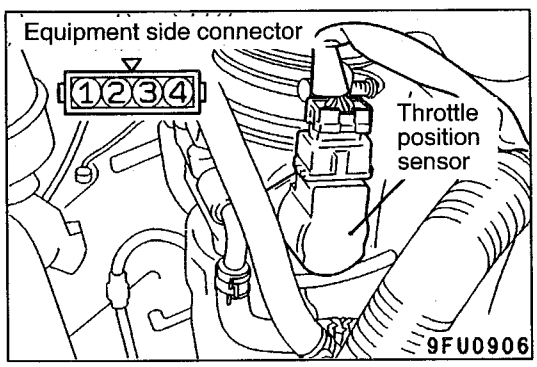

THROTTLE POSITION SENSOR ADJUSTMENT

1. Connect the MUT-II to the diagnosis connector. When not using the MUT-II, proceed as follows:

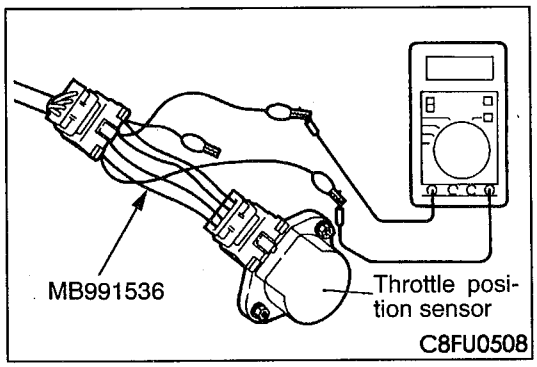

(1) Disconnect the throttle position sensor connector, and connect the special tool (test harness: MB991536) between the disconnected connector taking care not to confuse the terminal to be connected.

(2) Connect digital voltmeter between the terminal No.2 (sensor output: blue clip of special tool) and the terminal No.3 (sensor earth: white clip of special tool) of the throttle position sensor connector.

2. Disconnect the throttle valve control servo connector.
3. Turn the ignition switch to ON (but do not start the engine).
4. Check the output voltage of the throttle position sensor (1st channel) when the throttle valve is fully closed by your finger.

   Standard value: 0.4 – 0.6 V

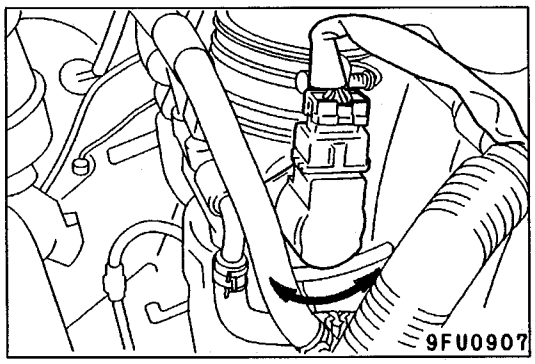

5. If not within the standard value, loosen the throttle position sensor mounting bolts. Then rotate the sensor body to adjust.
6. Check the output voltage of the throttle position sensor (2nd channel) when the throttle valve is fully closed by your finger. When not using the MUT-II, connect digital voltmeter between the terminal No.4 (sensor output: black clip of special tool) and the terminal No.3 (sensor earth: white clip of special tool) of the throttle position sensor connector.

   Standard value: 4.2 – 4.8 V

7. If not within the standard value, replace the throttle position sensor.
8. Turn the ignition switch to OFF.
9. Reconnect the throttle valve control servo connector.
10. Remove the MUT-II. If the MUT-II is not used, remove the special tool, and then connect the throttle position sensor connector.
11. If a diagnosis code is displayed, erase the diagnosis code by using the MUT-II or disconnect the negative battery cable from the battery terminal and then leave it for at least ten seconds. After that, reconnect the battery cable.
12. Turn the ignition switch to ON and return it to OFF, and then leave it for at least ten seconds. In addition, if the battery cable is disconnected at step 11, let the engine run at idle for approx. ten minutes.

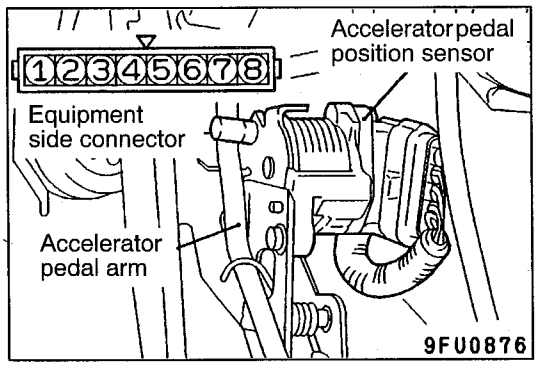

ACCELERATOR PEDAL POSITION SENSOR ADJUSTMENT

Caution

(1) Never attempt to tamper the accelerator pedal position sensor. The sensor position is precisely adjusted at factory.

(2) Should it be tampered, follow the procedure below:

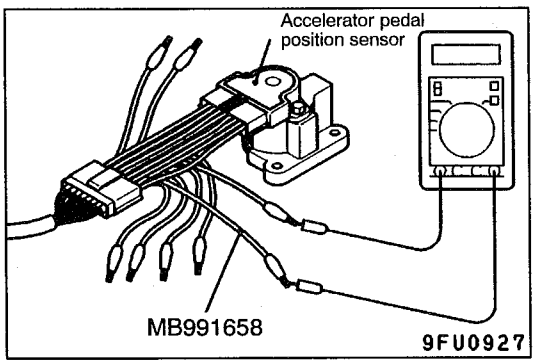

1. Connect the MUT-II to the diagnosis connector.
   When not using the MUT-II, proceed as follows:
   (1) Disconnect the accelerator pedal position sensor connector. Connect the special tool (test harness: MB991658) between the disconnected connectors, and then connect the digital voltmeter to the terminal No.3 [output terminal of accelerator pedal position sensor (1st channel)] and to the terminal No.1 [earth terminal of accelerator pedal position sensor (1st channel)].

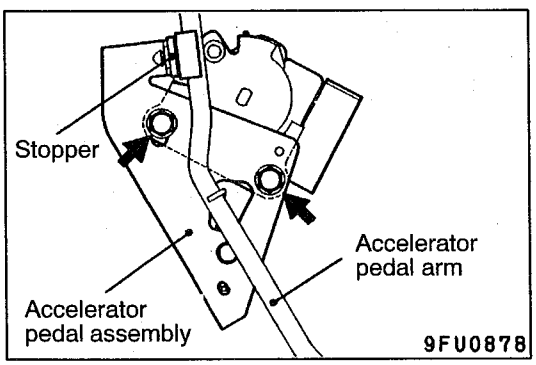

2. Loosen the accelerator pedal position sensor installation bolts.
3. Contact the accelerator pedal arm to the stopper.
4. Turn the ignition switch to the ON position (but do not start the engine).

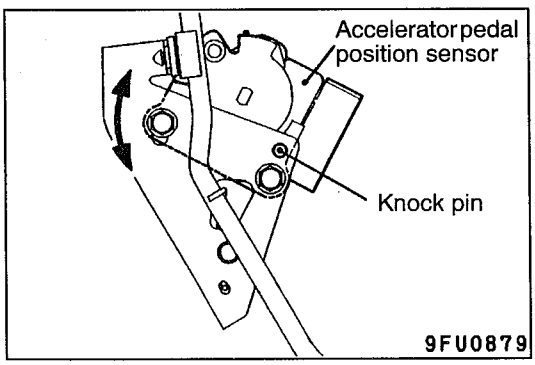

5. Rotate the accelerator pedal position sensor with the knock pin as the centre, and adjust the output voltage of the accelerator pedal position sensor (1st channel) to the standard value.

   Standard value: 0.935 – 1.135 V

6. Tighten the accelerator pedal position sensor installation bolts fully.

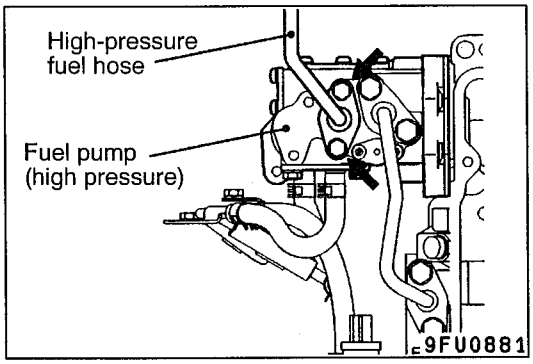

FUEL PRESSURE TEST

MEASUREMENT OF FUEL LOW PRESSURE BETWEEN FUEL PUMP (LOW PRESSURE) AND FUEL PUMP (HIGH PRESSURE)

1. Release residual pressure from the fuel pipe line to prevent fuel gush out. (Refer to P.13A-98.)
2. Disconnect the high-pressure fuel hose at the fuel pump (high pressure) side.

Caution
Cover the hose connection with rags to prevent splash of fuel that could be caused by some residual pressure in the fuel pipe line.

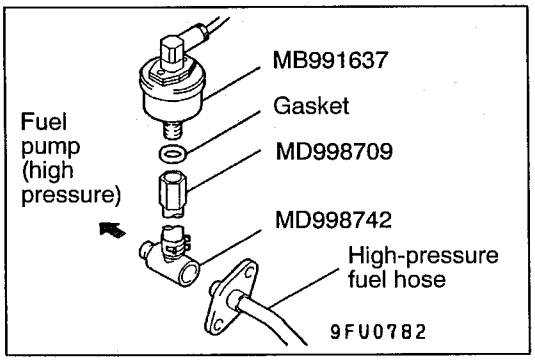

3. Remove the union joint and bolt from the special tool (adapter hose) and instead attach the special tool (hose adapter) to the adapter hose.
4. Install the special tool (for measuring the fuel pressure) that was set up in step 3.

<When using the fuel pressure gauge set (special tool)>
(1) Install the special tool (for measuring the fuel pressure) between the high-pressure fuel hose and the fuel pump (high pressure).
(2) Install the fuel pressure gauge set (special tool) on the special tool (for measuring the fuel pressure) putting the gasket between them.
(3) Connect the lead wire of the fuel pressure gauge set (special tool) to the power supply (cigarette lighter socket) and to the MUT-II.

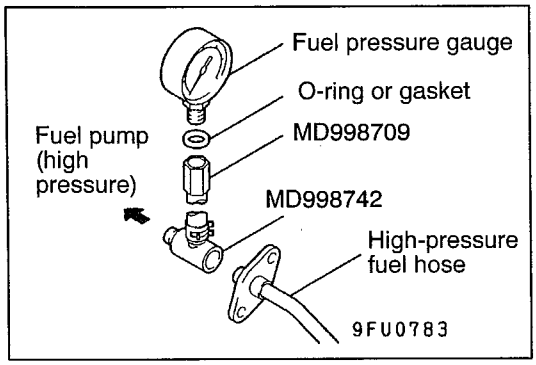

<When using the fuel pressure gauge>
(1) Install the fuel pressure gauge on the special tool (for measuring the fuel pressure) putting a suitable O-ring or gasket between them.
(2) Install the special tool which was set up in step (1) between the high-pressure fuel hose and the fuel pump (high pressure).

5. Connect the MUT-II to the diagnosis connector.
6. Turn the ignition switch to ON. (But do not start the engine.)
7. Select "Item No.07" from the MUT-II Actuator test to drive the fuel pump (low pressure) at the fuel tank side. Check that there are no fuel leaks from any parts.
8. Finish the actuator test or turn the ignition switch to OFF.
9. Start the engine and run at idle.
10. Measure fuel pressure while the engine is running at idle.

    Standard value: approximately 328 kPa

11. Check to see that fuel pressure at idle does not drop even after the engine has been raced several times.
12. If fuel pressure is out of the standard value, troubleshoot and repair according to the table below.

Symptom	Probable cause	Remedy
• Fuel pressure too low • Fuel pressure drops after racing	Clogged fuel filter	Replace fuel filter
	Fuel leaking to return side due to poor fuel pressure regulator (low pressure) valve seating or settled spring	Replace fuel pressure regulator (low pressure)
	Low fuel pump (low pressure) delivery pressure	Replace the fuel pump (low pressure)
Fuel pressure too high	Binding valve in fuel pressure regulator (low pressure)	Replace fuel pressure regulator (low pressure)
	Clogged fuel return hose or pipe	Clean or replace hose or pipe

13. Stop the engine and check change of fuel pressure gauge reading. Normal if the reading does not drop within 2 minutes. If it does, observe the rate of drop and troubleshoot and repair according to the table below.

Symptom	Probable cause	Remedy
Fuel pressure drops gradually after engine is stopped	Leaky fuel pressure regulator (low pressure) valve seat	Replace fuel pressure regulator (low pressure)
Fuel pressure drops sharply immediately after engine is stopped	Check valve in fuel pump (low pressure) is held open	Replace the fuel pump (low pressure)

14. Release residual pressure from the fuel pipe line. (Refer to P.13A-98.)
15. Remove the fuel pressure gauge and special tools from the fuel pump (high pressure).

    Caution
    Cover the hose connection with rags to prevent splash of fuel that could be caused by some residual pressure in the fuel pipe line.

16. Replace the O-ring at the end of the high-pressure fuel hose with a new one. Furthermore, apply engine oil to the new O-ring before replacement.
17. Fit the high-pressure fuel hose to the fuel pump (high pressure) and tighten the mounting bolt to specified torque.
18. Check for any fuel leaks by following the procedure in step 7.
19. Disconnect the MUT-II.

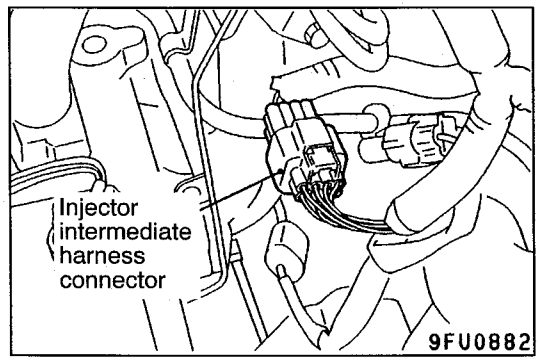

MEASUREMENT OF FUEL HIGH PRESSURE BETWEEN FUEL PUMP (HIGH PRESSURE) AND INJECTORS

NOTE
Measurement of the fuel pressure between the fuel pump (high pressure) and the injectors should be carried out after checking that the fuel pressure between the fuel pump (low pressure) and the fuel pump (high pressure) is normal.

1. Connect the MUT-II to the diagnosis connector.
2. Disconnect the injector intermediate harness connector.
3. Turn the ignition switch to ON.
4. Select "Item No.74" from the MUT-II Data list.
5. Crank the engine continuously for 2 seconds or more, and visually check that there are no fuel leaks from any parts.

   Caution
   If any fuel leaks appear, stop cranking immediately and repair the source of the leak.

6. Crank the engine, and then measure the fuel pressure immediately after 20 seconds.

   Limit: Minimum 1 MPa

   Caution
   If the fuel pressure is less than 1 MPa, there may be a partial fuel leak in the high-pressure fuel system.

7. Turn the ignition switch to OFF.
8. Connect the injector intermediate harness connector.

9. Start the engine and run at idle.
10. Measure fuel pressure while the engine is running at idle.

    Standard value: approximately 4 – 6.9 MPa

11. Check to see that fuel pressure at idle does not drop even after the engine has been raced several times.
12. If fuel pressure is out of the standard value, troubleshoot and repair according to the table below.

Symptom	Probable cause	Remedy
• Fuel pressure too low • Fuel pressure drops after racing	Fuel leaking to return side due to poor fuel pressure regulator (high pressure) valve seating or settled spring	Replace fuel pressure regulator (high pressure)
	Low fuel pump (high pressure) delivery pressure	Replace the fuel pump (high pressure)
Fuel pressure too high	Binding valve in fuel pressure regulator (high pressure)	Replace fuel pressure regulator (high pressure)
	Clogged fuel return hose or pipe	Clean or replace hose or pipe

13. Stop the engine and turn the ignition switch to OFF.
14. Disconnect the MUT-II.

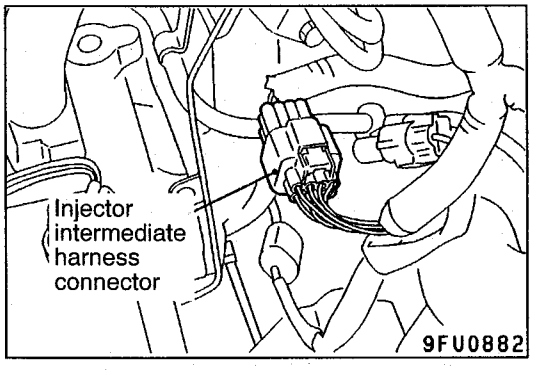

FUEL LEAK CHECK

1. Connect the MUT-II to the diagnosis connector.
2. Disconnect the injector intermediate harness connector.
3. Turn the ignition switch to ON.
4. Select "Item No.74" from the MUT-II Data list.
5. Crank the engine continuously for two seconds or more, and visually check that there are no fuel leaks from any parts.

   Caution
   If any fuel leaks appear, stop cranking immediately and repair the source of the leak.

6. Crank the engine, and then measure fuel pressure immediately after 20 seconds.

   Limit: Minimum 1 MPa

   Caution
   If the fuel pressure is less than 1 MPa, there may be a partial fuel leak in the high-pressure fuel system.

7. Turn off the ignition switch.
8. Reconnect the injector intermediate connector.
9. Remove the MUT-II.

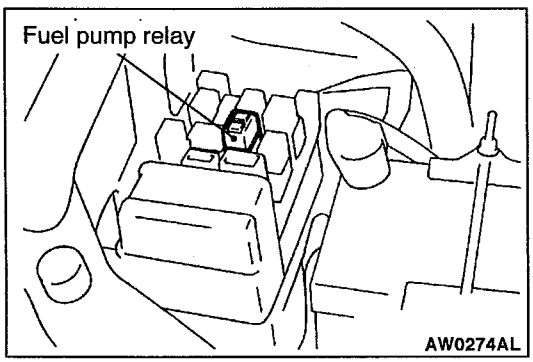

FUEL PUMP CONNECTOR DISCONNECTION (HOW TO REDUCE FUEL PRESSURE)

When removing the fuel pipe, hose, etc., since fuel pressure in the fuel pipe line is high, do the following operation so as to release fuel pressure in the line and prevent fuel from running out.

1. Remove the fuel filler cap to release pressure in the fuel tank.
2. Remove the fuel pump relay.
3. Connect the MUT-II to the diagnosis connector.

   Caution
   Turn off the ignition switch before disconnecting or connecting the MUT-II.

4. Turn off the ignition switch.
5. Select "Item No.74" from the MUT-II Data list.
6. Crank the engine for at least two seconds.
7. If the engine is not be started, use the MUT-II to make sure that the fuel pressure is 0.5 MPa or less. Then turn off the ignition switch.

8. If the engine is started, release fuel pressure by the following procedure:
   (1) Turn off the ignition switch, and then stop the engine.
   (2) Disconnect one of the ignition coil connectors.
   (3) Crank the engine for at least two seconds.
   (4) If the engine is not be started, use the MUT-II to make sure that the fuel pressure is 0.5 MPa or less. Then turn off the ignition switch.
   (5) If the engine is started, stop it by racing and use the MUT-II to make sure that the fuel pressure is 0.5 MPa or less. Then turn off the ignition switch.
   (6) Reconnect the ignition coil connector.

   Caution
   Clean the spark plug which corresponds to the disconnected ignition coil connector.
9. Remove the MUT-II.
10. Install the fuel pump relay.

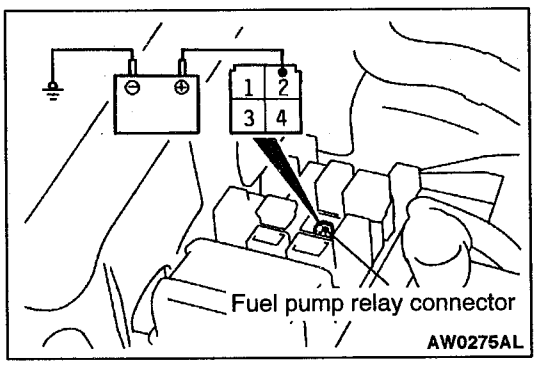

FUEL PUMP OPERATION CHECK

1. Check the operation of the fuel pump by using the MUT-II to force-drive the fuel pump.
2. If the fuel pump will not operate, check by using the following procedure, and if it is normal, check the drive circuit.
   (1) Turn off the ignition switch.
   (2) Remove the fuel pump relay. Connect the terminal No.1 of the harness-side connector to the battery. Check if the fuel pump operation sound can be heard at this time.

   NOTE
   As the fuel pump is an in-tank type, the fuel pump sound is hard to hear, so remove the fuel filler cap and check from the tank inlet.

   (3) Check the fuel pressure by pinching the fuel hose with the fingertips.

COMPONENT LOCATION

Name	Symbol	Name	Symbol
A/C relay	A	Fuel pressure sensor	F
A/C switch	O	Fuel pump relay	A
Accelerator pedal position sensor (1st and 2nd channels)	Q	Ignition coil	I
		Inhibitor switch <A/T>	J
Air flow sensor (with intake air temperature sensor and barometric pressure sensor)	N	Injectors	G
		Injector driver	B
Camshaft position sensor	H	Injector driver relay	A
Crank angle sensor	E	Oxygen sensor	U
Detonation sensor	K	Power steering fluid pressure switch	M
Diagnosis connector	P	Purge control solenoid valve	C
EGR valve	F	Throttle position sensor	D
Engine control relay	A	Throttle valve controller	S
Engine coolant temperature sensor	L	Throttle valve control servo	D
Engine-ECU	S	Throttle valve control servo relay	T
Engine warning lamp (CHECK ENGINE lamp)	R	Vehicle speed sensor	J

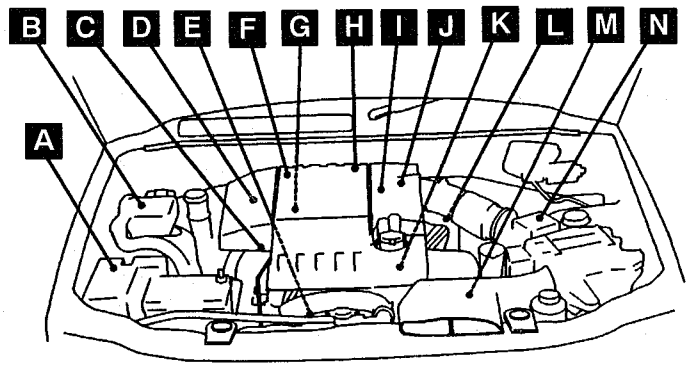

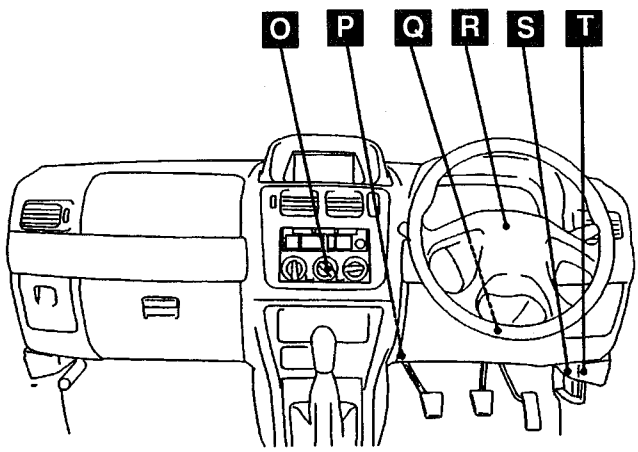

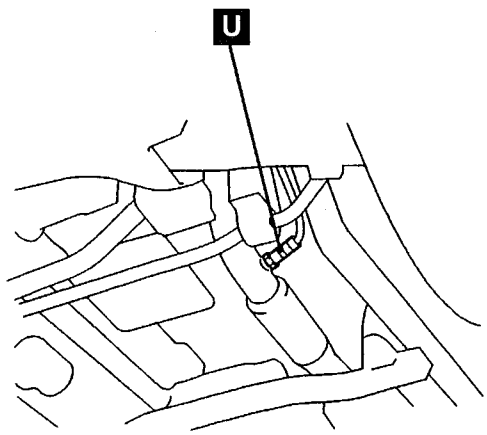

9FU08B3

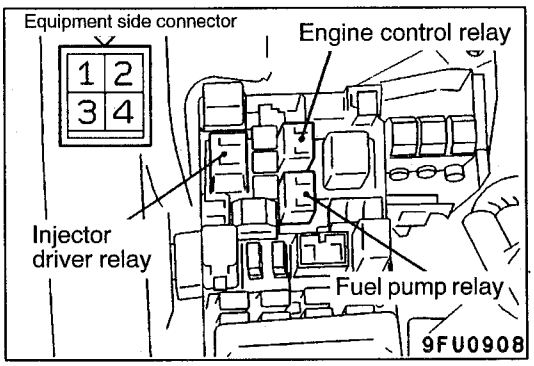

ENGINE CONTROL RELAY, FUEL PUMP RELAY, INJECTOR DRIVER RELAY AND THROTTLE VALVE CONTROL SERVO RELAY CONTINUITY CHECK

Battery voltage	Terminal No.			
	1	2	3	4
Not supplied		○		○
Supplied	○	⊖	○	⊕

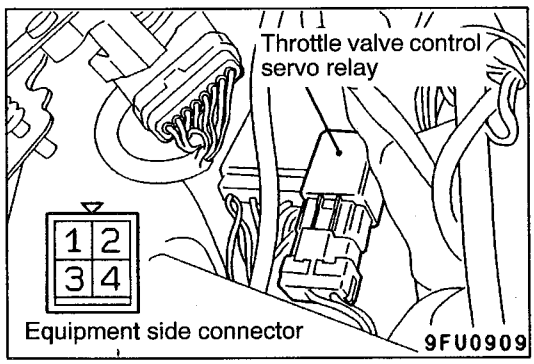

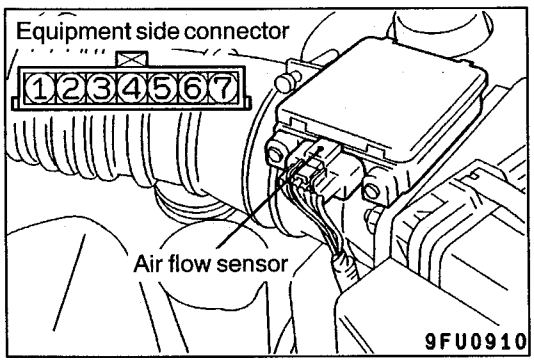

INTAKE AIR TEMPERATURE SENSOR CHECK

1. Disconnect the air flow sensor connector.
2. Measure resistance between terminals 5 and 6.

Standard value:
2.3 – 3.0 kΩ (at 20°C)
0.30 – 0.42 kΩ (at 80°C)

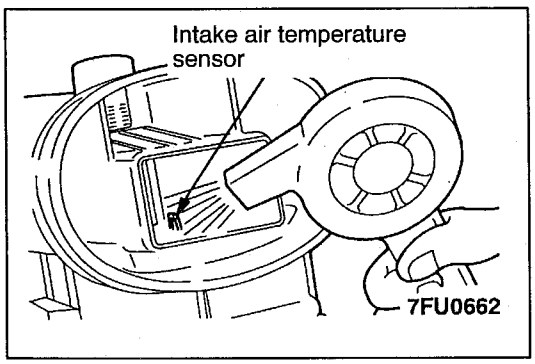

3. Measure resistance while heating the sensor using a hair drier.

Normal condition:

Temperature (°C)	Resistance (kΩ)
Higher	Smaller

4. If the value deviates from the standard value or the resistance remains unchanged, replace the air flow sensor assembly.

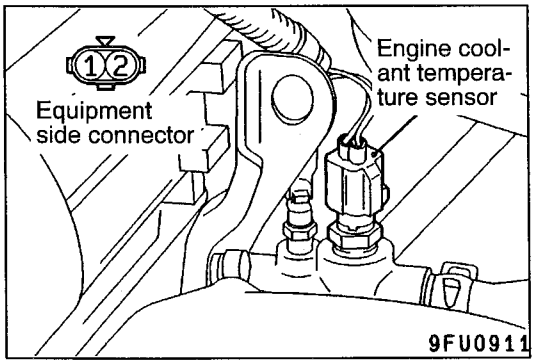

ENGINE COOLANT TEMPERATURE SENSOR CHECK

Caution
Be careful not to touch the connector (resin section) with the tool when removing and installing.

1. Remove the engine coolant temperature sensor.

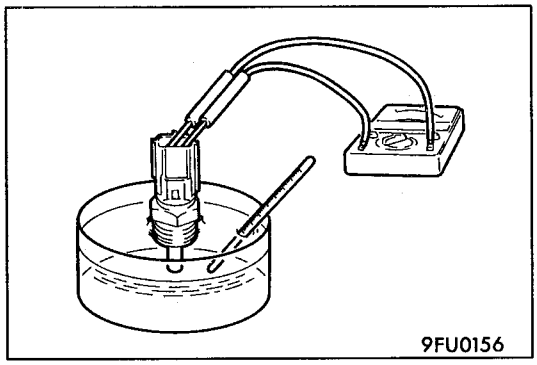

2. With temperature sensing portion of engine coolant temperature sensor immersed in hot water, check resistance.

   Standard value:
   2.1 – 2.7 kΩ (at 20°C)
   0.26 – 0.36 kΩ (at 80°C)

3. If the resistance deviates from the standard value greatly, replace the sensor.

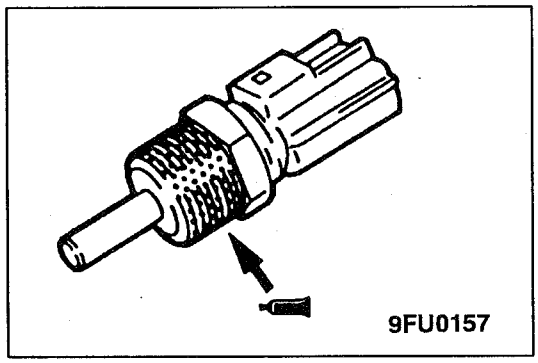

4. Apply sealant to threaded portion.

   Specified sealant:
   3M NUT Locking Part No.4171 or equivalent

5. Install the engine coolant temperature sensor and tighten it to the specified torque.

   Tightening torque: 29 Nm

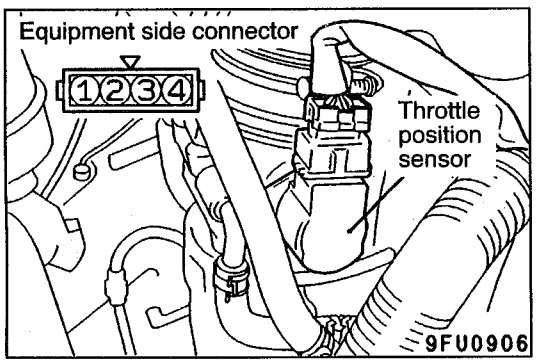

THROTTLE POSITION SENSOR CHECK

1. Disconnect the throttle position sensor connector.
2. Measure the resistance between throttle position sensor side connector terminal 1 and terminal 3.

   Standard value: 3.5 – 6.5 kΩ

3. Measure resistance between terminal Nos. 1 and 2 as well as 1 and 4 of the throttle position sensor connector, respectively.

   Normal condition:

Throttle valve slowly open until fully open from the idle position	Changes smoothly in proportion to the opening angle of the throttle valve

4. If the resistance is outside the standard value, or if it doesn't change smoothly, replace the throttle position sensor.

   NOTE
   For the throttle position sensor adjustment procedure, refer to P.13A-91.

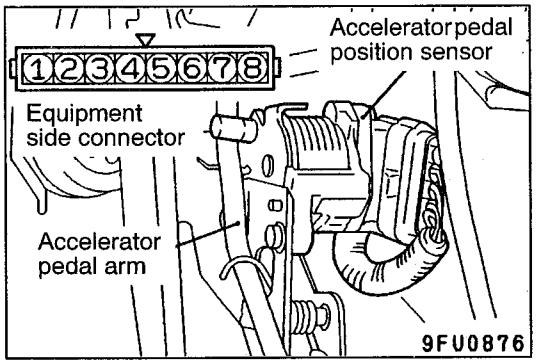

ACCELERATOR PEDAL POSITION SENSOR (1ST CHANNEL) CHECK

1. Disconnect the accelerator pedal position sensor connector.
2. Measure resistance between terminal No.2 (sensor power supply) and 1 (sensor earth) of the sensor connector.

   Standard value: 3.5 – 6.5 kΩ
3. Measure resistance between terminal No.2 (sensor power supply) and 3 (sensor output) of the connector.

   Normal condition:

Depress the accelerator pedal slowly.	Resistance value changes in accordance with the accelerator pedal depression smoothly.

4. If not within the standard value, or resistance value does not change smoothly, replace the accelerator pedal position sensor assembly.

   NOTE
   After replacement, adjust the accelerator pedal position sensor. (Refer to P.13A-93.)

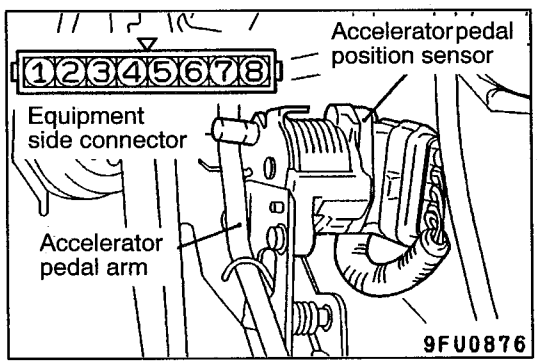

ACCELERATOR PEDAL POSITION SENSOR (2ND CHANNEL) CHECK

1. Disconnect the accelerator pedal position sensor connector.
2. Measure resistance between terminal No.8 (sensor power supply) and 7 (sensor earth) of the sensor connector.

   Standard value: 3.5 – 6.5 kΩ
3. Measure resistance between terminal No.8 (sensor power supply) and 6 (sensor output) of the connector.

   Normal condition:

Depress the accelerator pedal slowly.	Resistance value changes in accordance with the accelerator pedal depression smoothly.

4. If not within the standard value, or resistance value does not change smoothly, replace the accelerator pedal position sensor assembly.

   NOTE
   After replacement, adjust the accelerator pedal position sensor. (Refer to P.13A-93.)

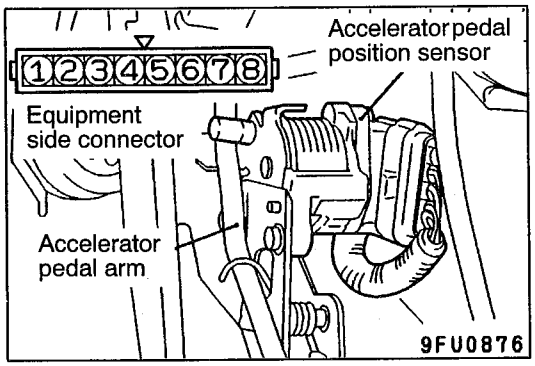

ACCELERATOR PEDAL POSITION SWITCH CHECK

1. Disconnect the accelerator pedal position sensor connector.
2. Check continuity between terminal No.4 (accelerator pedal position switch) and 5 (sensor earth) of the connector.

Normal condition

Accelerator pedal	Continuity
Depressed	No continuity
Released	Continuity (0 Ω)

3. If defective, replace the accelerator pedal position sensor assembly.

NOTE
After replacement, adjust the accelerator pedal position sensor and switch. (Refer to P.13A-93.)

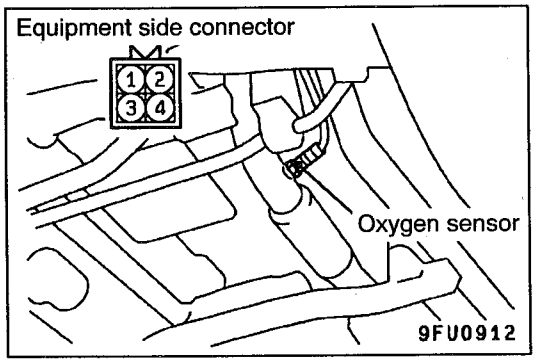

OXYGEN SENSOR CHECK

1. Disconnect the oxygen sensor connector and connect the special tool (test harness) to the connector on the oxygen sensor side.
2. Make sure that there is continuity (11 – 18 Ω at 20°C) between terminal 1 (red cip of special tool) and terminal 3 (blue clip of special tool) on the oxygen sensor connector.

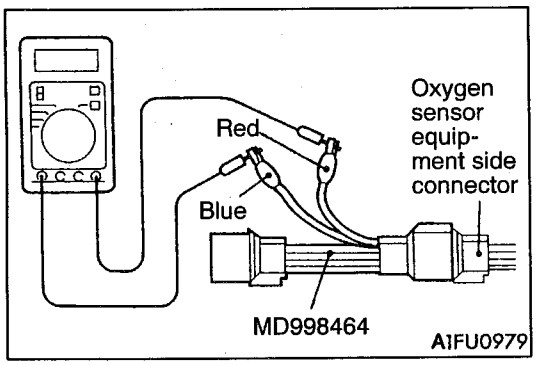

3. If there is no continuity, replace the oxygen sensor.
4. Warm up the engine until engine coolant is 80°C or higher.

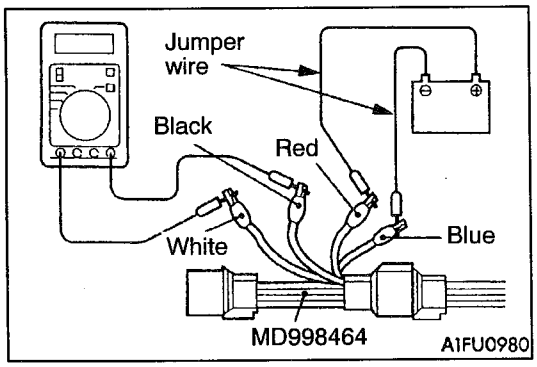

5. Use a jumper wire to connect terminal 1 (red clip) of the oxygen sensor connector to the battery (+) terminal and terminal 3 (blue clip) to the battery (–) terminal.

Caution
Be very careful when connecting the jumper wire; incorrect connection can damage the oxygen sensor.

6. Connect a digital voltage meter between terminal 2 (black clip) and terminal 4 (white clip).

7. While repeatedly racing the engine, measure the oxygen sensor output voltage.

Standard value:

Engine	Oxygen sensor output voltage	Remarks
When racing the engine	0.6 – 1.0 V	If you make the air/fuel ratio rich by racing the engine repeatedly, a normal oxygen sensor will output a voltage of 0.6 – 1.0 V.

8. If the sensor is defective, replace the oxygen sensor.

NOTE
For removal and installation of the oxygen sensor, refer to GROUP 15 – Exhaust Pipe and Main Muffler.

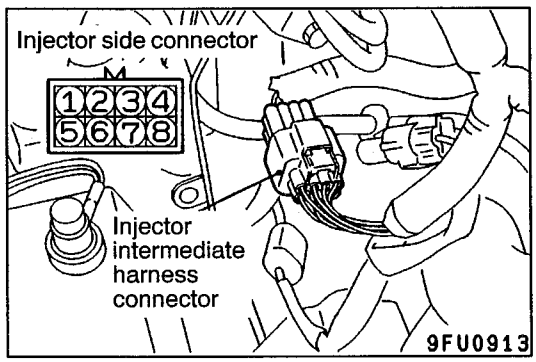

INJECTOR CHECK

1. Disconnect the injector intermediate harness connector.
2. Measure the resistance between each of the terminals.

Standard value: 0.9 – 1.1 Ω (at 20°C)

Injector	Measurement terminal
No.1 cylinder	1 – 2
No.2 cylinder	3 – 4
No.3 cylinder	5 – 6
No.4 cylinder	7 – 8

3. Connect the injector intermediate harness connector.

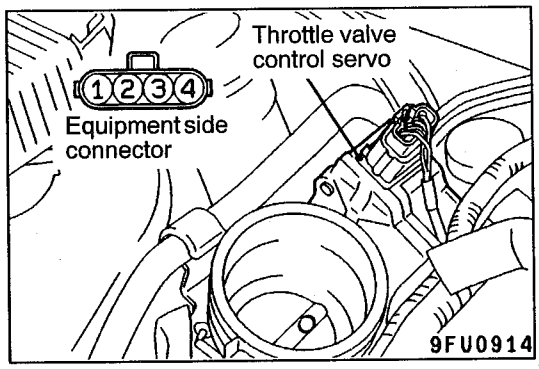

THROTTLE VALVE CONTROL SERVO CHECK

Operation Check

1. Disconnect the air intake hose from the throttle body.
2. Turn on the ignition switch.
3. Check that the throttle valve opens or closes in response to the accelerator pedal depression.

Check of Coil Resistance

1. Disconnect the throttle valve control servo connector.
2. Measure resistance between the throttle valve control servo connector terminals.

Standard value:

Terminals to be measured	Resistance value (Ω)
1 – 3	1.35 – 1.65 (at 20°C)
2 – 4	

3. Check that there is no continuity between the terminals and body.

PURGE CONTROL SOLENOID VALVE CHECK

Refer to GROUP 17 – Emission Control System.

EGR VALVE CHECK

Refer to GROUP 17 – Emission Control System.

FUEL PUMP (HIGH PRESSURE) AND FUEL PRESSURE REGULATOR (HIGH PRESSURE)

REMOVAL AND INSTALLATION

Pre-removal and Post-installation Operation
- Fuel Discharge Prevention <before removal only> (Refer to P.13A-98.)
- Engine Cover Removal and Installation
- Resonance Tank Removal and Installation (Refer to GROUP 15.)
- Fuel Leak Check <after installation only> (Refer to P.13A-98.)

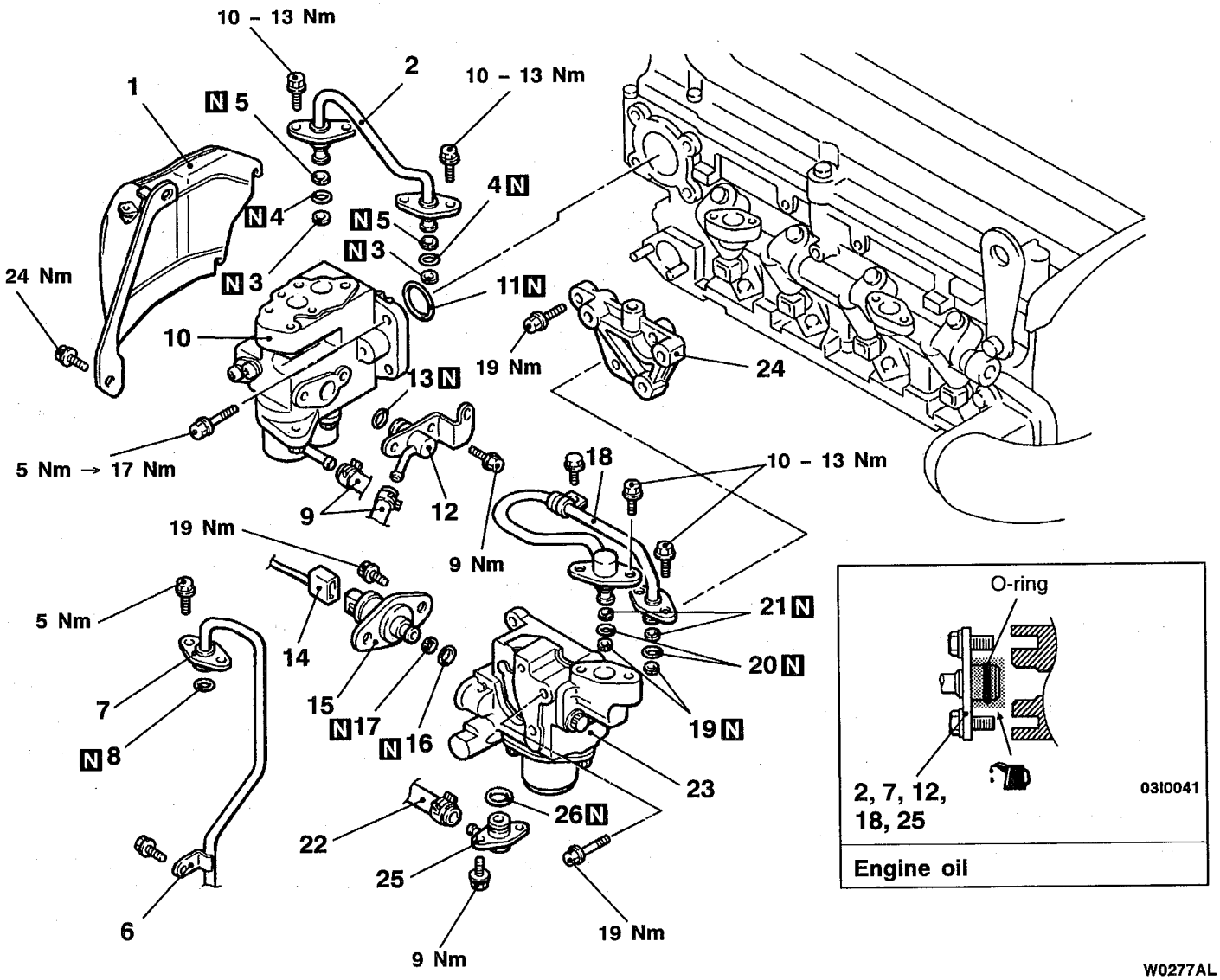

W0277AL
00008811

Fuel pump (High pressure) removal steps

▶F◀ • Fuel pump (high pressure) air bleeding
• Throttle body removal (Refer to P.13A-113.)
◀A▶ 1. Fuel pump protector
▶C◀ 2. Fuel feed pipe
▶B◀ 3. Back-up ring A
▶B◀ 4. O-ring
▶B◀ 5. Back-up ring B
6. Fuel pressure hose clamp
▶C◀ 7. Fuel pressure hose connection
8. O-ring
9. Fuel return hose connection
▶E◀ 10. Fuel pump (high pressure)
11. O-ring
12. Fuel pump return nipple
13. O-ring

Fuel pressure regulator (High pressure) removal steps

• Intake manifold assembly removal (Refer to GROUP 15.)
14. Fuel pressure sensor connector connection
15. Fuel pressure sensor
▶D◀ 16. O-ring
▶D◀ 17. Back-up ring
▶C◀ 18. Fuel return pipe
▶B◀ 19. Back-up ring A
▶B◀ 20. O-ring
▶B◀ 21. Back-up ring B
22. Fuel return hose connection
▶A◀ 23. Fuel pressure regulator (high pressure)
24. Spacer
25. Fuel nipple
26. O-ring

REMOVAL SERVICE POINT

◀A▶ FUEL PUMP PROTECTOR REMOVAL

Lift up the transmission with a jack to create clearance between the engine and front deck, and then remove the fuel pump protector.

INSTALLATION SERVICE POINTS

▶A◀ FUEL PRESSURE REGULATOR (HIGH PRESSURE) INSTALLATION

1. Install provisionally the fuel pressure regulator (high pressure) to the spacer.
2. Install the fuel return pipe, and then tighten the fuel pressure regulator (high pressure) to the specified torque.

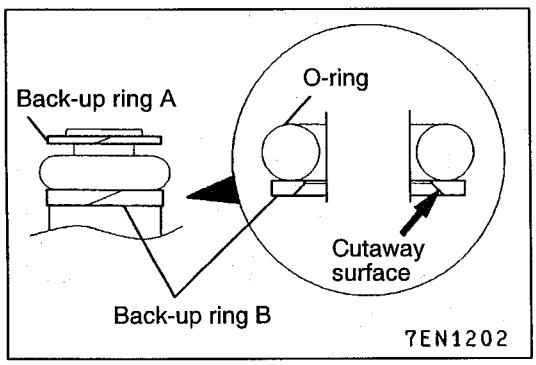

▶B◀ BACK-UP RING B/O-RING/BACK-UP RING A INSTALLATION

Install the back-up rings and the O-ring as shown in the illustration.

Caution

1. **Install the back-up ring B facing its cutaway surface toward the opposite side of the O-ring as shown in the illustration.**
2. **Confirm the outer diameter of the back-up ring A. Take care not to install the back-up ring for the fuel pressure sensor by mistake. (Outer diameter of the back-up ring A: 14.8 mm)**

▶C◀ FUEL RETURN PIPE/FUEL PRESSURE HOSE/FUEL FEED PIPE INSTALLATION

Apply a small amount of fresh engine oil to the O-ring.

Caution
Take care not to let any of the engine oil get inside the fuel pump (high pressure), fuel pressure regulator (high pressure) or the delivery pipe assembly.

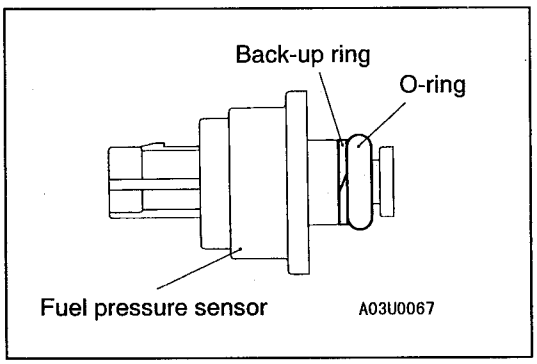

▶D◀ BACK-UP RING/O-RING INSTALLATION

Install the back-up ring and the O-ring as shown in the illustration.

Caution
Take care not to install the back-up ring A for the injector, fuel feed pipe or fuel return pipe by mistake. (Outer diameter of the back-up ring for the fuel pressure sensor: 15.1 mm)

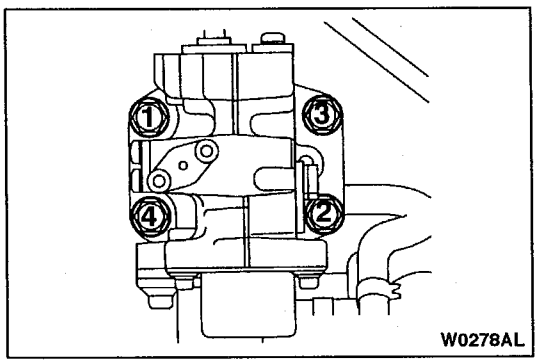

▶E◀ FUEL PUMP (HIGH PRESSURE) INSTALLATION

1. Apply a small amount of fresh engine oil to the fuel pump (high pressure) roller and O-ring.
2. Install temporarily the fuel pump (high pressure) to the cylinder head.
3. Install the fuel feed pipe, and then tighten the fuel pump (high pressure) mounting bolts to 5 Nm in the order shown in the illustration.
4. Tighten the bolts to 17 Nm in the order shown in the illustration. The overall difference in tightening torque between the four bolts should be within 2 Nm.

▶F◀ FUEL PUMP (HIGH PRESSURE) AIR BLEEDING

1. Run the engine at 2,000 r/min for 15 seconds or more in order to bleed the air.

   NOTE
   When removing the fuel pump (high pressure), air may get into the fuel pump (high pressure). If air gets into the fuel pump (high pressure), diagnosis code No.56 for abnormal fuel pressure will be output.

2. Use the MUT-II to check the diagnosis code. If the diagnosis code No.56 for fuel pressure sensor system defect is output, erase it.

INJECTOR

REMOVAL AND INSTALLATION

Pre-removal and Post-installation Operation
Fuel Pressure Regulator (High Pressure) Removal and Installation (Refer to P.13A-107.)

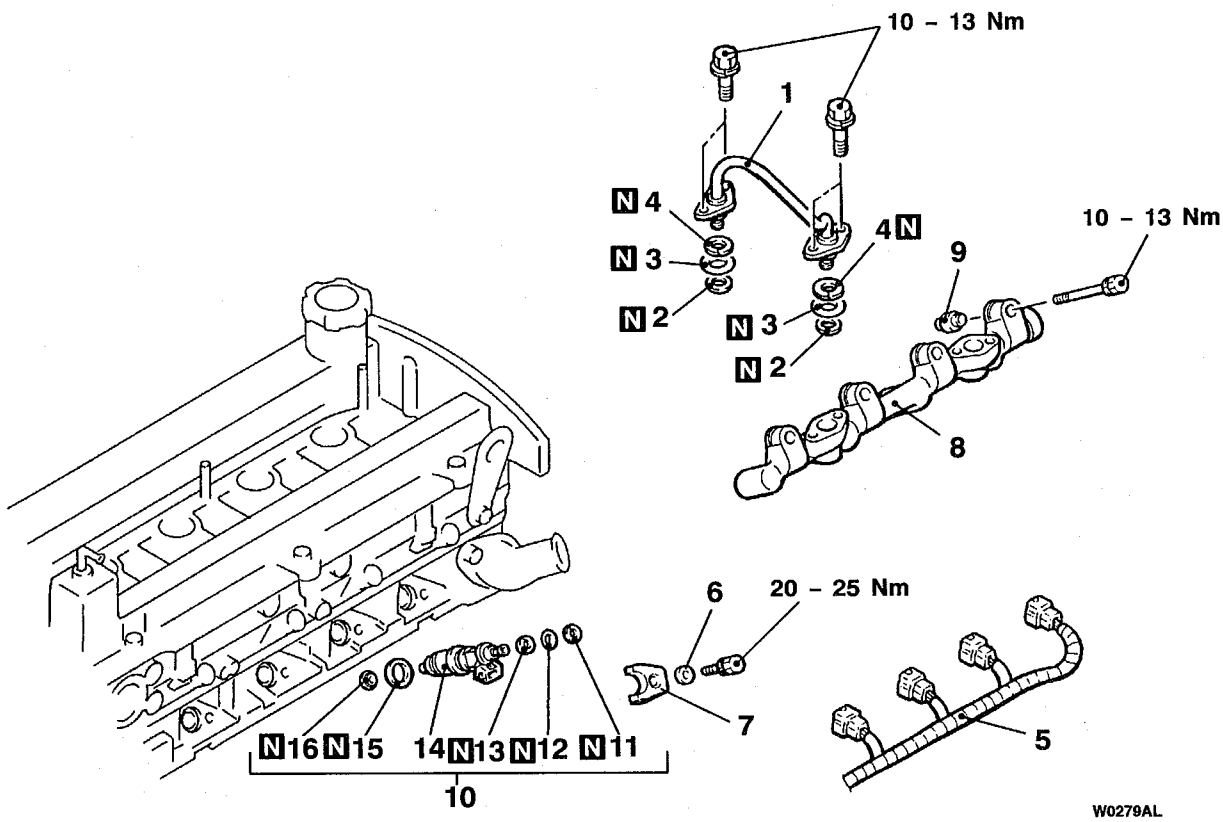

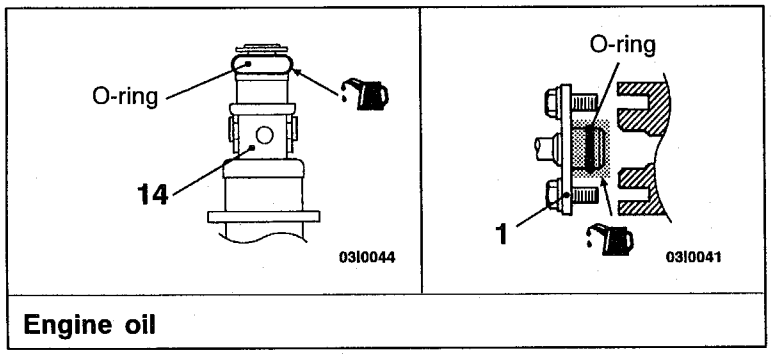

Engine oil

Removal steps

- ▶D◀ 1. Fuel feed pipe
- ▶C◀ 2. Back-up ring A
- ▶C◀ 3. O-ring
- ▶C◀ 4. Back-up ring B
- ◀A▶ 5. Injector harness connector
- 6. Washer
- 7. Injector holder
- ◀B▶ ▶B◀ 8. Delivery pipe assembly
- 9. Insulator
- ◀B▶ ▶B◀ 10. Fuel injector assembly
- 11. Back-up ring
- 12. O-ring
- 13. Back-up ring
- 14. Fuel injector
- 15. Gasket
- ▶A◀ 16. Corrugated washer

REMOVAL SERVICE POINTS

◀A▶ INJECTOR HARNESS CONNECTOR DISCONNECTION

Caution
Disconnect the battery (–) cable from its terminal before carrying out this operation.

◀B▶ DELIVERY PIPE ASSEMBLY/FUEL INJECTOR ASSEMBLY REMOVAL

Remove the delivery pipe assembly with the fuel injector assembly still attached.

Caution
Be careful not to drop the fuel injector assembly when removing the delivery pipe assembly.

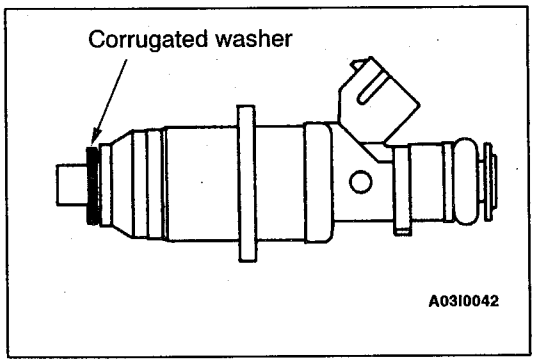

INSTALLATION SERVICE POINTS

▶A◀ CORRUGATED WASHER INSTALLATION

Caution
The corrugated washer should always be replaced with a new part.

▶B◀ FUEL INJECTOR ASSEMBLY/DELIVERY PIPE ASSEMBLY INSTALLATION

1. Apply a small amount of fresh engine oil to the O-ring.

   Caution
   Take care not to let any of the engine oil get inside the delivery pipe assembly.
2. While being careful not to damage the O-ring, turn the fuel injector assembly to the left and right and connect it to the delivery pipe assembly. After connecting, check that the fuel injector turns smoothly.
3. If the fuel injector does not turn smoothly, the cause may be that the O-ring is getting caught. Remove the fuel injector, check the O-ring for damage and re-connect the fuel injector to the delivery pipe assembly and then re-check.

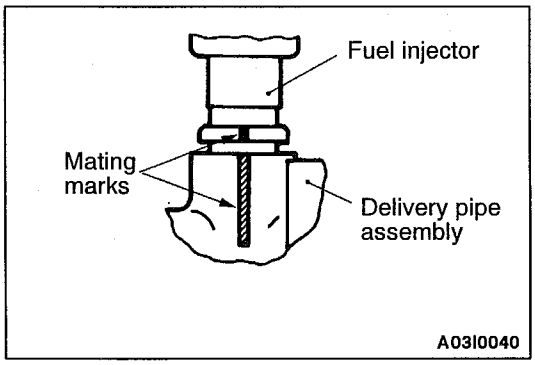

4. Align the mating marks on the delivery pipe assembly and the fuel injector, and then install the delivery pipe assembly with the injector assembly still attached.

5. Install the delivery pipe and fuel injectors to the cylinder head, and then tighten them provisionally.
6. Install the injector holders and washers, and then tighten them to the specified torque.

Caution
Observe the tightening torque.

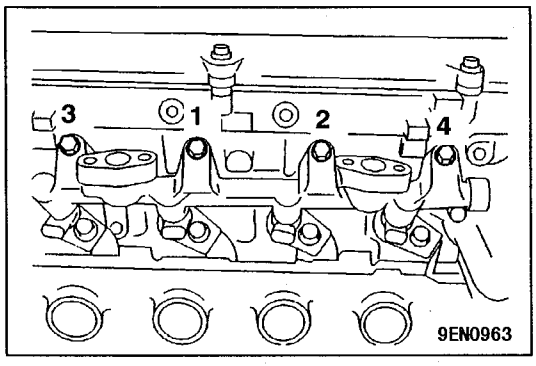

7. Tighten the delivery pipe and fuel injectors to the specified torque in the order shown in the illustration.

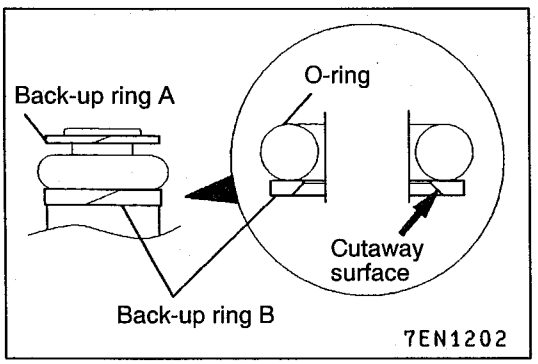

▶C◀ BACK-UP RING B/O-RING/BACK-UP RING A INSTALLATION

Install the back-up rings and the O-ring as shown in the illustration.

Caution
Install the back-up ring B facing its cutaway surface toward the opposite side of the O-ring as shown in the illustration.

▶D◀ FUEL FEED PIPE INSTALLATION

Apply a small amount of fresh engine oil to the O-ring.

Caution
Take care not to let any of the engine oil get inside the fuel pump (high pressure), fuel pressure regulator (high pressure) and delivery pipe.

THROTTLE BODY

REMOVAL AND INSTALLATION

Pre-removal and Post-installation Operation
- Engine Coolant Draining and Supplying (Refer to GROUP 14 – On-vehicle Service.)
- Resonance Tank Removal and Installation (Refer to GROUP 15.)

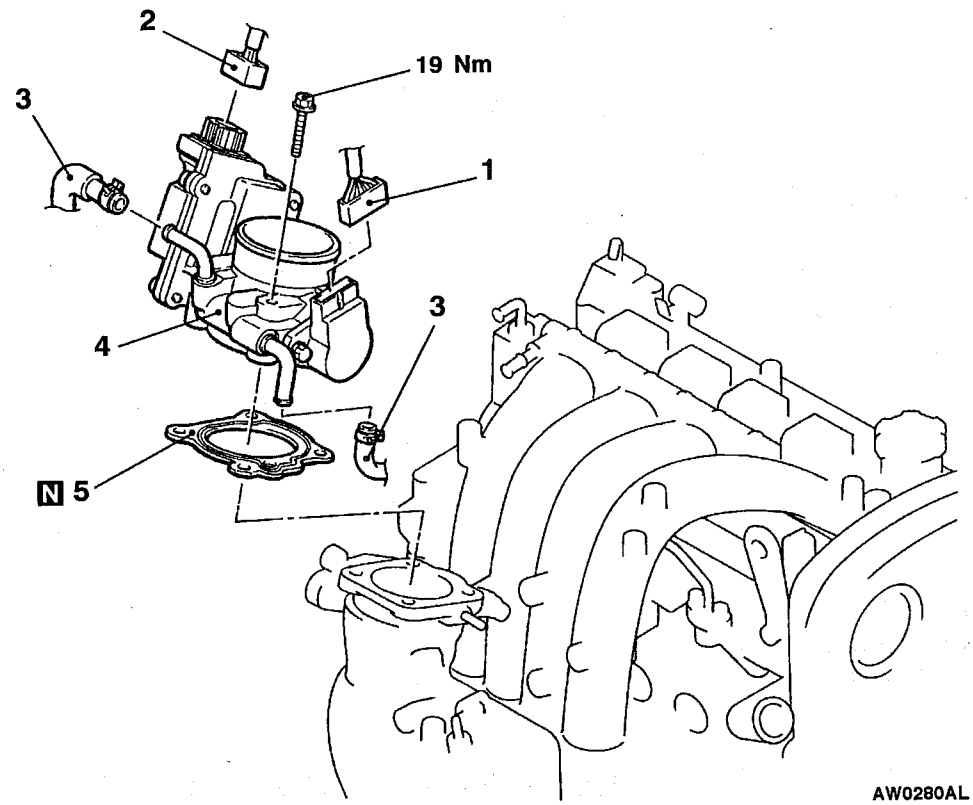

Removal steps
1. Throttle position sensor connector connection
2. Throttle control servo connector connection
3. Water hose connection
▶A◀ 4. Throttle body assembly
5. Throttle body gasket

INSTALLATION SERVICE POINT

▶A◀ THROTTLE BODY INSTALLATION

If the throttle body is replaced, initialize the electronic-controlled throttle valve system.

Initialization

Turn on the ignition switch, and turn it to LOCK (OFF) position within one second. Then leave it for at least ten seconds with the ignition switch in LOCK (OFF) position.

DISASSEMBLY AND REASSEMBLY

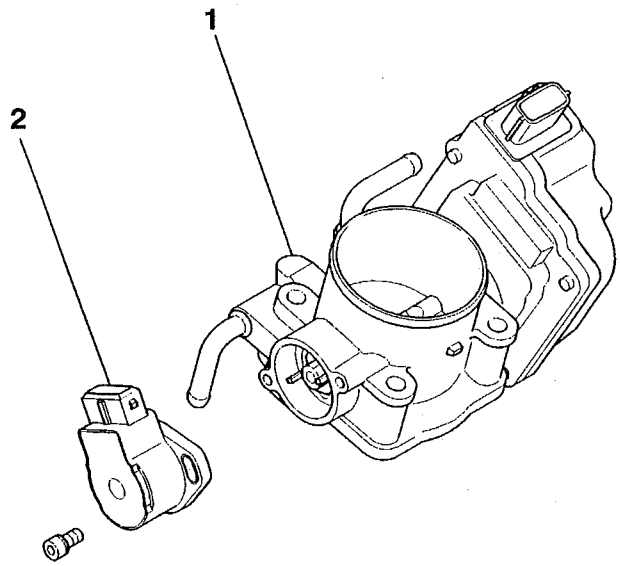

9EN0979

Disassembly steps

▶A◀ 1. Throttle position sensor
2. Throttle body

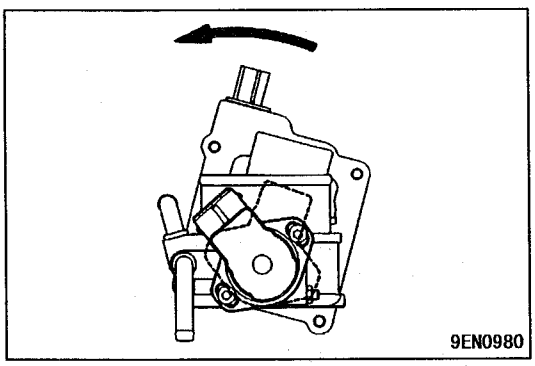

9EN0980

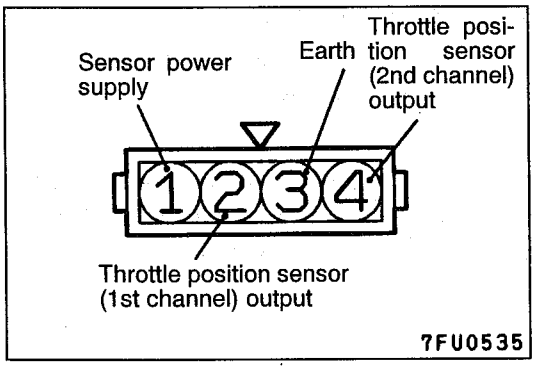

7FU0535

REASSEMBLY SERVICE POINTS

▶A◀ THROTTLE POSITION SENSOR

1. Position the throttle position sensor on the throttle body along the dotted line as shown in the illustration.
2. Rotate the throttle position sensor anticlockwise as shown in the illustration, and then tighten the screws.
3. Measure resistance value between terminal Nos. 1 (sensor power supply) and 2 (throttle position sensor 1st-channel output) as well as 1 (sensor power supply) and 4 (throttle position sensor 2nd-channel output).

Normal condition

Open the throttle valve slowly from the idle position to full-open position.	Resistance value changes smoothly in response to throttle valve opening angle.

4. If the resistance value does not change smoothly, replace the throttle position sensor.

INJECTOR DRIVER

REMOVAL AND INSTALLATION

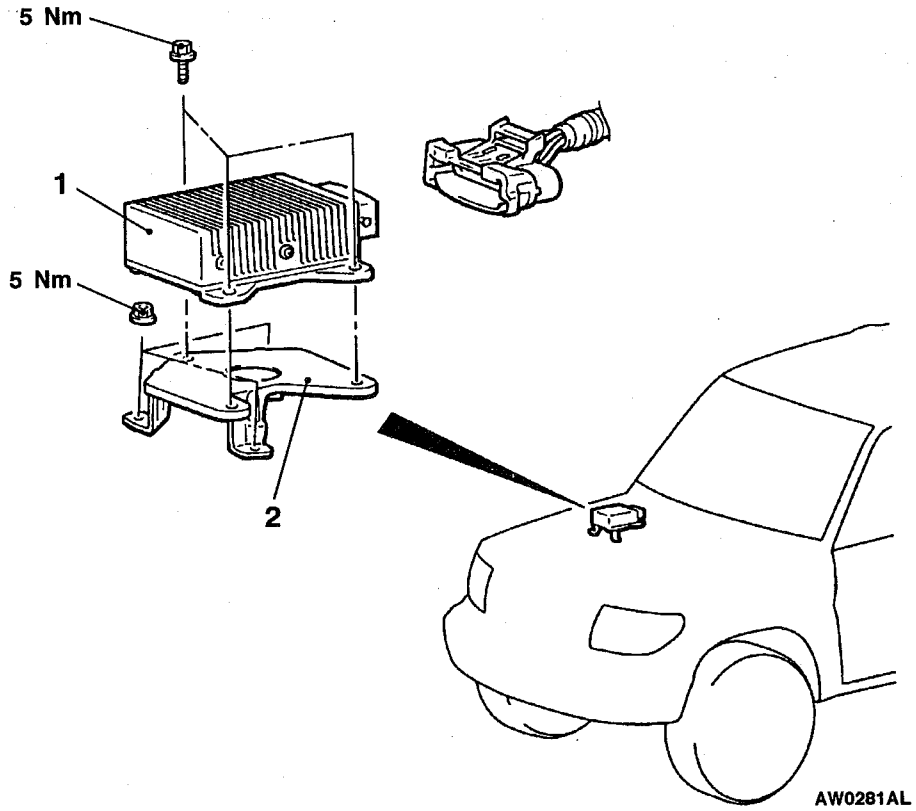

Removal steps

◀A▶ 1. Injector driver
2. Bracket

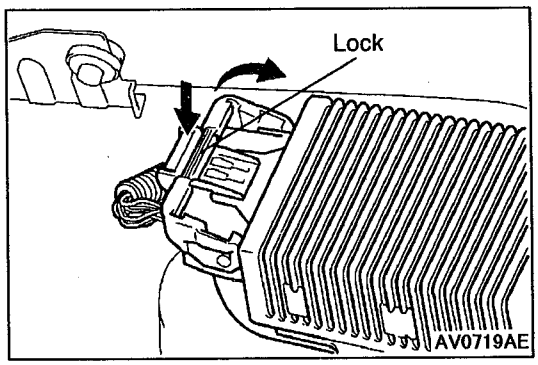

REMOVAL SERVICE POINT

◀A▶ INJECTOR DRIVER REMOVAL

Press the injector driver connector in the place shown in the illustration to disconnect the injector driver connector.

Caution

1. **Disconnect the battery (–) cable from its terminal before carrying out this operation.**
2. **High-tension current is flowing in the harness between the injector driver and the injector while engine is running, and the injector driver will become hot after the vehicle has been driven, so take care when handling it.**

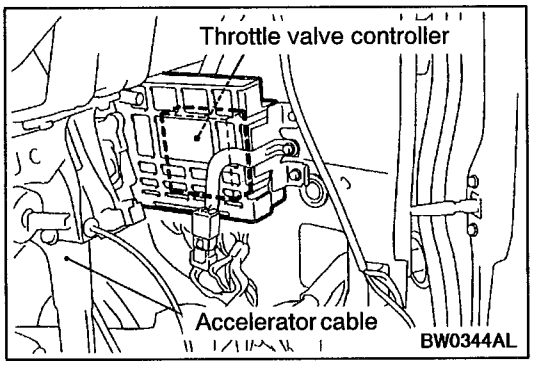

THROTTLE VALVE CONTROLLER

INSTALLATION SERVICE POINT

If the throttle valve controller is replaced, initialize the electronic-controlled throttle valve system.

Initialization

Turn on the ignition switch, and turn it to LOCK (OFF) position within one second. Then leave it for at least ten seconds with the ignition switch in LOCK (OFF) position.